Low voltage

Masterpact NT and NW

LV power circuit breakers
and switch-disconnectors

Catalogue
2011

Schneider Electric

Masterpact NT and NW

The standard for power circuit breakers around the world.

Over the years, other major manufacturers have tried to keep up by developing products incorporating Masterpact's most innovative features, including the breaking principle, modular design and the use of composite materials.

In addition to the traditional features of power circuit breakers (withdrawability, discrimination and low maintenance), Masterpact NT and NW ranges offer built-in communications and metering functions, all in optimised frame sizes.

Masterpact NT and NW incorporate the latest technology to enhance both performance and safety. Easy to install, with user-friendly, intuitive operation and environment-friendly design, Masterpact NT and NW are, quite simply, circuit breakers of their time.

Covering all your applications

Masterpact meets the needs of all types of LV electrical distribution networks.

Building
- Hotels
- Hospitals
- Offices
- Retail

Data Centres and Networks

Industry
- Mining and minerals
- Automotive
- Food and beverage
- Chemical industry

Energy and Infrastructures
- Airports
- Oil and gas
- Water
- Electrical energy
- Marine

An answer to specific applications

- 1000 V for mining applications
- Direct current networks
- Corrosion protection
- Switch-disconnectors and earthing switches
- Automatic transfer switching equipment (ATSE) for emergency power systems
- High electrical endurance applications: Masterpact NT H2 is a high performance device offering high breaking capacity (Icu: 50 kA/480 V) and a high level of discrimination, all in a small volume.

Whenever high short circuit is involved

Masterpact UR is a low voltage ultra rapid opening circuit breaker. Its fault detection rate and its reaction speed mean that it will stop a short circuit from developing. As a result, this is the key component in very high power installations equipped with a number of power sources connected in parallel.

Masterpact UR truly comes into its own when short circuit currents can reach very high levels and when continuity of service is a must: offshore installations, cement plants, petrochemical industry. It is also especially suited to electrical installations on board merchant.

All standards
Masterpact is compliant with international standards IEC 60947-1 and 2, IEC 68230 for type 2 tropicalisation, UL489, ANSI, UL1066, CCC and GOST.

Two families and three frame sizes

The range of power circuit breakers includes two families:

> Masterpact NT, the world's smallest true power circuit breaker, with ratings from 630 to 1600 A

> Masterpact NW, in two frame sizes, one from 800 to 4000 A and the other from 4000 A to 6300 A

5 performance levels

> **N1 - for standard applications with low short-circuit levels.**
> H1 - for industrial sites with high short-circuit levels or installations with two parallel-connected transformers.
> H2 - high-performance for heavy industry where very high short-circuits can occur.
> H3 - for incoming devices supplying critical applications requiring both high performance and a high level of discrimination.
> L1 - for high current-limiting capability and a discrimination level (37 kA) as yet unequalled by any other circuit breaker of its type; intended for the protection of cable-type feeders or to raise the performance level of a switchboard when the transformer power rating is increased.

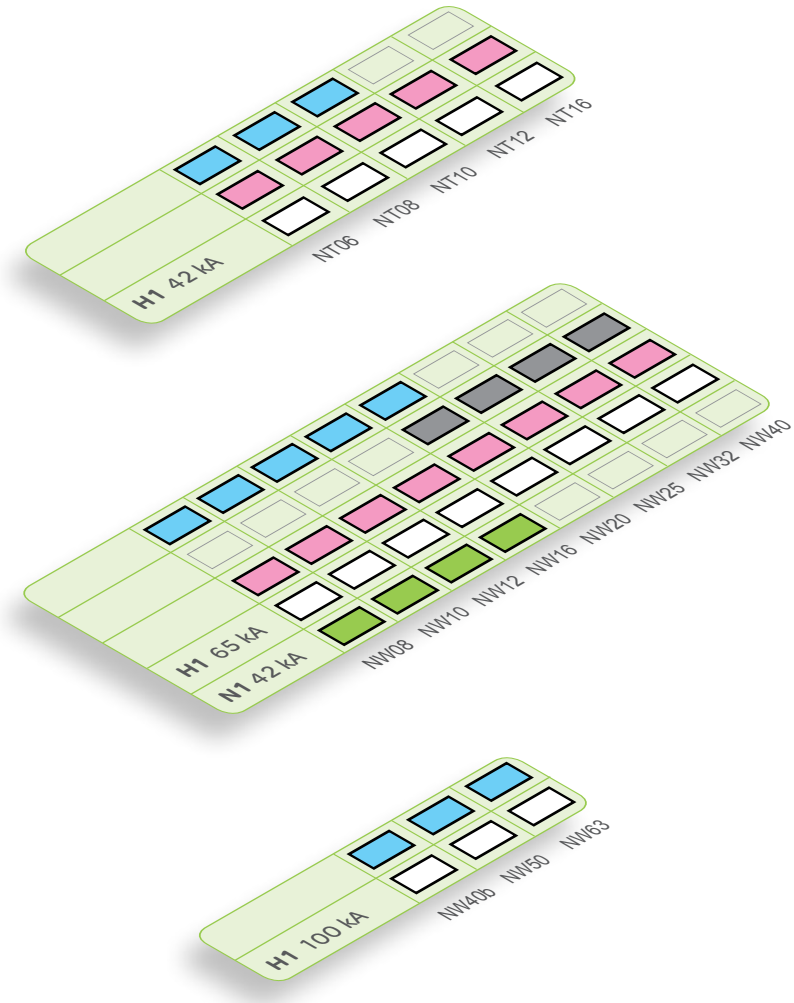

3 sizes:

Masterpact NT 630 to 1600 A

Masterpact NW 800 to 4000 A

Masterpact NW 4000 to 6300 A

Optimised volumes and ease of installation

Aiming at standardising electrical switchboards at a time when installations are increasingly complex, Masterpact provides an unequalled simplicity, both concerning choice and installation.

The smallest circuit breaker in the world

Masterpact NT innovates by offering all the performance of a power circuit breaker in an extremely small volume. The 70 mm pole pitch means a three-pole draw out circuit breaker can be installed in a switchboard section 400 mm wide and 400 mm deep.

Maximum security

The arc chutes absorb the energy released during breaking, thus limiting the stresses exerted on the installation.
They filter and cool the gases produced, reducing effects perceptible from the outside.

Optimised volumes

Up to 4000 A, Masterpact NW circuit breakers are all the same size, the same as the old M08 to 32 range.
From 4000 A to 6300 A, there is just one size.

More than
60
patents are used to design Masterpact

Retrofit solutions

- Special connections terminals are available to replace a fixed or a drawout Masterpact M08 to 32 with a Masterpact NW, without modifying the busbars or the door cut-out.
- "Plug and Play" retrofit solution : this solution enables retrofitting of Masterpact M units with considerably reducing on-site intervention time and getting the performance of last generation device.

30 minutes

and **2** easy operations

The retrofit solutions use a factory modified and adapted Masterpact NW which is installed in Masterpact M's original chassis.

Standardisation of the switchboard

With optimised sizes, the Masterpact NT and NW ranges simplify the design of switchboards and standardise the installation of devices:

> a single connection layout for Masterpact NT

> three connection layouts for Masterpact NW:

- one from 800 to 3200 A
- one for 4000 A
- one up to 6300 A

> horizontal or vertical rear connections can be modified on-site by turning the connectors 90° or they can even be replaced by front connection terminals

> identical connection terminals for the fixed or draw-out version for each rating (Masterpact NW)

> front connection requires little space because the connectors not increase the depth of the device.

Practical installation solutions

The Masterpact NW range further improves the installation solutions that have built the success of its predecessors:

> incoming connection to top or bottom terminals

> no safety clearance required

> connection:

- horizontal or vertical rear connection
- front connection with minimum extra space
- mixed front and rear connections

> 115 mm pole pitch on all versions

> no derating up to 55 °C and 4000 A.

Compliance with environmental requirements

The materials used for Masterpact are not potentially dangerous to the environment and are marked to facilitate sorting for recycling.

Production facilities are non-polluting in compliance with the ISO 14001 standard.

Monitoring and protecting your low voltage network

Masterpact can be integrated in a general supervision system to optimise your electrical installation.

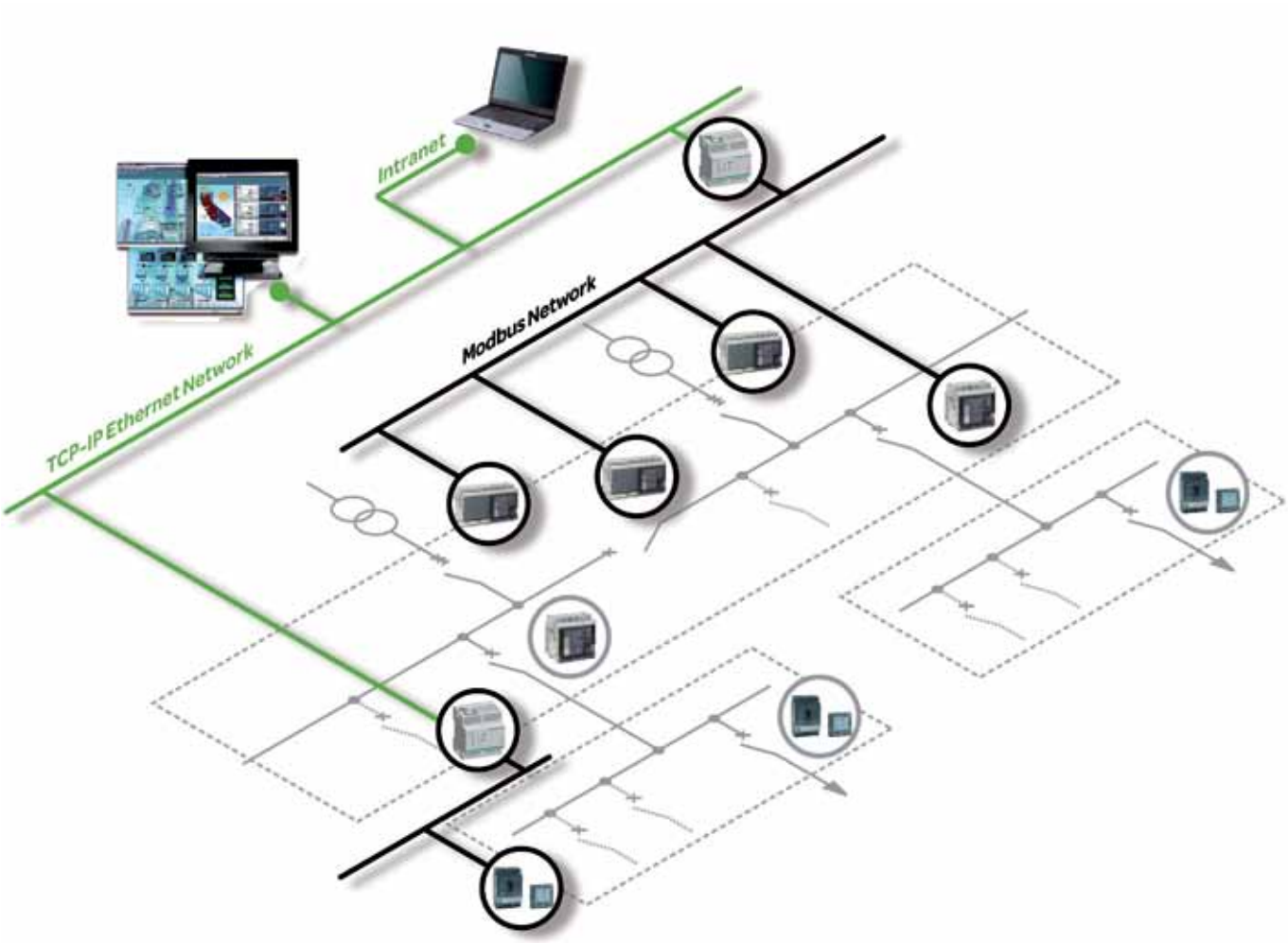

Intuitive use

Micrologic control units are equipped with a digital LCD display used in conjunction with simple navigation buttons. Users can directly access parameters and settings. Navigation between screens is intuitive and the immediate display of values greatly simplifies settings. Text is displayed in the desired language.

Ensuring safety at any time

All Masterpact circuit breakers are equipped with a Micrologic electronic control unit that offers all types of current and advanced protection, measurement and communication. Protection functions are separated from the measurement functions and are managed by an ASIC electronic component. This independence guarantees immunity from conducted or radiated disturbances and ensures the highest degree of reliability.

Maximising continuity of service

Because a LV power supply interruption is unacceptable especially in critical power applications, an automatic system is required for LV transfer switching. For your peace of mind, Masterpact enables automatic control and management of power sources in your low voltage distribution network guaranteeing the hi-reliability of your installation.

Optimising the management of your electrical installation

When equipped with a Micrologic type E, P or H, Masterpact can be integrated in a general supervision system to optimise installation operation and maintenance. Alarms may be programmed for remote indications. Used with PowerLogic ION Enterprise software, you can exploit the electrical data (current, voltage, frequency, power, and power quality) to optimise continuity of service and energy management:

> reduce energy and operations costs
> improve power quality, reliability and uptime
> optimise equipment use.

EGX300 gateway-server or iRIO RTU

The EGX300 web-enabled gateway-server or the iRIO RTU (remote terminal unit) can both be used as Ethernet coupler for the PowerLogic System devices and for any other communicating devices operating under Modbus RS485 protocol. Data is viewable via a standard web browser.

PowerLogic ION Enterprise

PowerLogic ION Enterprise software is a complete power management solution for your facility or plant operations. It can be connected to Masterpact through Ethernet/Modbus protocol.

ASIC

Measurement functions are controlled by an additional microprocessor.

Protection functions are electronically managed independently of measurement functions.

An ASIC (Application-Specific Integrated Circuit) is common to all trip units, which boosts immunity to conducted or radiated interference and increases reliability.

120
374
77
14970

General contents

Presentation 3

Functions and characteristics A-1

Installation recommendations B-1

Dimensions and connection C-1

Electrical diagrams D-1

Additional characteristics E-1

General overview
Detailed contents

This overview describes all the functions offered by Masterpact NT and NW devices. The two product families have identical functions implemented using the same or different components depending on the case.

PB100762-60A

DB101123

DB101124

DB127407

PB106363A35

PB103360

DB124583

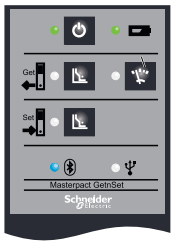

Circuit breakers and switch-disconnectors page A-2

- ■ Ratings:
  - □ Masterpact NT 630 to 1600 A
  - □ Masterpact NW 800 to 6300 A.
- ■ Circuit breakers type N1, H1, H2, H3, L1.
- ■ Switch-disconnectors type NA, HA, HF.
- ■ 3 or 4 poles.
- ■ Fixed or drawout versions.
- ■ Option with neutral on the right.
- ■ Protection derating.

Micrologic control units page A-8

Ammeter A and Energy E
2.0 basic protection
5.0 selective protection
6.0 selective + earth-fault protection
7.0 (1) selective + earth-leakage protection

Power meter P
5.0 selective protection
6.0 selective + earth-fault protection
7.0 selective + earth-leakage protection

Harmonic meter H
5.0 selective protection
6.0 selective + earth-fault protection
7.0 selective + earth-leakage protection

- ■ External sensor for earth-fault protection.
- ■ Rectangular sensor for earth-leakage protection.
- ■ Setting options (long-time rating plug):
  - □ low setting 0.4 to 0.8 x Ir
  - □ high setting 0.8 to 1 x Ir
  - □ without long-time protection.
- ■ External power-supply module.
- ■ Battery module.

(1) Only for ammeter A.

Power Meter page A-20

Masterpact equipped with Micrologic 2 /5 / 6 trip units offer type A (ammeter) or E (energy) metering functions as well as communication. Using Micrologic sensors and intelligence, Masterpact provides access to measurements of all the main electrical parameters on the built-in screen, on a dedicated FDM121 display unit or via the communication system.

Operating assistance page A-22

Integration of measurement functions provides operators with operating assistance functions including alarms tripped by user-selected measurement values, time-stamped event tables and histories, and maintenance indicators.

Switchboard display unit page A-23

The main measurements can be read on the built-in screen of Micrologic 5 / 6 trip units. They can also be displayed on the FDM121 switchboard display unit along with pop-up windows signalling the main alarms.

Portable data acquisition page A-28

- ■ Masterpact and GetnSet.

Communication page A-30

- ■ COM option in Masterpact.
- ■ Masterpact in a communication network.

PB104347A55

PB104348A55

PB104353A55

PB104349A55

Connections page A-37

- ■ Rear connection (horizontal or vertical).
- ■ Front connection.
- ■ Mixed connections.
- ■ Optional accessories:
- □ bare-cable connectors and connector shields
- □ terminal shields
- □ vertical-connection adapters
- □ cable-lug adapters
- □ interphase barriers
- □ spreaders
- □ disconnectable front-connection adapter
- □ safety shutters, shutter locking blocks, shutter position indication and locking.

DB101156

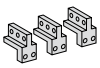

DB101147

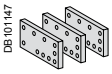

DB101149

DB101150

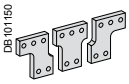

Locking page A-41

- ■ Pushbutton locking by padlockable transparent cover.
- ■ OFF-position locking by padlock or keylock.
- ■ Chassis locking in disconnected position by keylock.
- ■ Chassis locking in connected, disconnected and test positions.
- ■ Door interlock (inhibits door opening with breaker in connected position).
- ■ Racking interlock (inhibits racking with door open).
- ■ Racking interlock between crank and OFF pushbutton.
- ■ Automatic spring discharge before breaker removal.
- ■ Mismatch protection.

DB101109

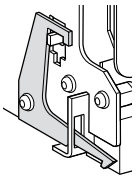

DB101110

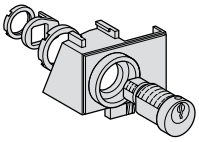

Indication contacts page A-43

- ■ Standard or low-level contacts:
- □ ON/OFF indication (OF)
- □ “fault trip” indication (SDE)
- □ carriage switches for connected (CE) disconnected (CD) and test (CT) positions.
- ■ Programmable contacts:
- □ 2 contacts (M2C)
- □ 6 contacts (M6C).

DB101111

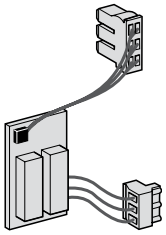

M2C contact.

DB101112

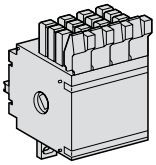

OF contact.

Remote operation page A-45

- ■ Remote ON/OFF:
- □ gear motor
- □ XF closing or MX opening voltage releases
- □ PF ready-to-close contact

options: RAR automatic or RES electrical remote reset
- BPFE electrical closing pushbutton.

- ■ Remote tripping function:
- □ MN voltage release

- standard
- adjustable or non-adjustable delay

- □ or second MX voltage release.

DB101113

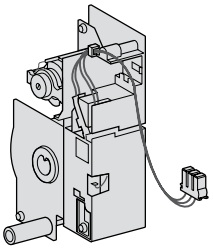

Gear motor.

DB101114

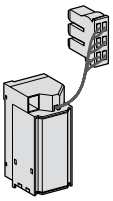

MX, XF and MN volage releases.

Accessories page A-49

- ■ Auxiliary terminal shield.
- ■ Operation counter.
- ■ Escutcheon.
- ■ Transparent cover for escutcheon.
- ■ Escutcheon blanking plate.

DB101115

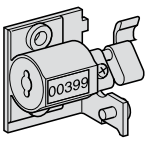

TOOLS

schneider-electric.com

This international site allows you to access all the Schneider Electric products in just 2 clicks via comprehensive range data-sheets, with direct links to:

- complete library: technical documents, catalogs, FAQs, brochures…
- selection guides from the e-catalog.
- product discovery sites and their Flash animations.

You will also find illustrated overviews, news to which you can subscribe, the list of country contacts…

The technical guide

These technical guides help you comply with installation standards and rules i.e.: the electrical installation guide, the protection guide, the switchboard implementation guide, the technical booklets and the co-ordination tables all form genuine reference tools for the design of high performance electrical installations.
For example, the LV protection co-ordination guide - discrimination and cascading - optimises choice of protection and connection devices while also increasing markedly continuity of supply in the installations.

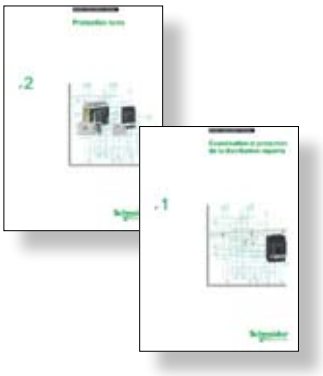

Functions and characteristics

Presentation *3*

Circuit breakers and switch-disconnectors **A-2**
NT06 to NT16 and NW08 to NW63 A-2
NT06 to NT16 A-4
NW08 to NW63 A-6

Micrologic control units **A-8**
Overview of functions A-8
Micrologic A “ammeter” A-10
Micrologic E “energy” A-12
Micrologic P “power” A-14
Micrologic H “harmonics” A-18

Power Meter functions **A-20**
Micrologic A/E/P/H control unit with COM option (BCM ULP) A-20

Operating-assistance functions **A-22**
Micrologic A/E/P/H control unit with COM option (BCM ULP) A-22

Switchboard-display functions **A-23**
Micrologic A/E/P/H control unit with COM option (BCM ULP) A-23

Micrologic control units **A-25**
Accessories and test equipment A-25

Portable data acquisition **A-28**
Masterpact and GetnSet A-28

Communication **A-30**
COM option in Masterpact A-30
Overview of functions A-31

Masterpact communication **A-32**
Networks and sofware A-32
RSU and RCU utilities A-34
Supervision software A-35
Communication wiring system A-36

Connections **A-37**
Overview of solutions A-37
Accessories A-38

Locking **A-41**
On the device A-41
On the chassis A-42

Indication contacts **A-43**

Remote operation **A-45**
Remote ON / OFF A-45
Remote tripping A-48

Accessories **A-49**

Source-changeover systems **A-50**
Presentation A-50
Mechanical interlocking A-51
Electrical interlocking A-53
Associated automatic controllers A-55

Masterpact NW with corrosion protection 800-4000 A **A-56**

Earthing switch Masterpact **A-58**

Installation recommendations *B-1*
Dimensions and connection *C-1*
Electrical diagrams *D-1*
Additional characteristics *E-1*
Catalogue numbers and order form *F-1*

Circuit breakers and switch-disconnectors

NT06 to NT16 and NW08 to NW63

NT and NW selection criteria

	Masterpact NT			Masterpact NW	
	Standard applications			Standard applications	
	NT06, NT08, NT10, NT12, NT16		NT06, NT08, NT10	NW08...NW16	NW08...NW40
	H1	H2	L1	N1	H1
Type of application	Standard applications with low short-circuit currents	Applications with medium-level short-circuit currents	Limiting circuit breaker for protection of cable-type feeders or upgraded transformer ratings	Standard applications with low short-circuit currents	Circuit breaker for industrial sites with high short-circuit currents
Icu/Ics at 440 V	42 kA	50 kA	130 kA	42 kA	65 kA
Icu/Ics at 1000 V	-	-	-	-	-
Icu/Ics at 500 V DC L/R < 15 ms	-	-	-	-	-
Position of neutral	Left	Left	Left	Left	Left or right
Fixed	F	F	F	F	F
Drawout	D	D	D	D	D
Switch-disconnector version	Yes	No	No	Yes	Yes
Front connection	Yes	Yes	Yes	Yes	Yes up to 3200 A
Rear connection	Yes	Yes	Yes	Yes	Yes
Type of Micrologic control unit	A, E, P, H	A, E, P, H	A, E, P, H	A, E, P, H	A, E, P, H

Masterpact NT06 to NT16 installation characteristics

Circuit breaker		NT06, NT08, NT10			NT12, NT16	
Type		H1	H2	L1	H1	H2
Connection						
Drawout	FC	■	■	■	■	■
	RC	■	■	■	■	■
Fixed	FC	■	■	■	■	■
	RC	■	■	■	■	■
Dimensions (mm) H x W x D						
Drawout	3P	322 x 288 x 277				
	4P	322 x 358 x 277				
Fixed	3P	301 x 276 x 196				
	4P	301 x 346 x 196				
Weight (kg) (approximate)						
Drawout	3P/4P	30/39				
Fixed	3P/4P	14/18				

Masterpact NW08 to NW63 installation characteristics

Circuit breaker		NW08, NW10, NW12, NW16					NW20				
Type		N1	H1	H2	L1	H10	H1	H2	H3	L1	H10
Connection											
Drawout	FC	■	■	■	■	-	■	■	■	■	-
	RC	■	■	■	■	■	■	■	■	■	■
Fixed	FC	■	■	■	-	-	■	■	-	-	-
	RC	■	■	■	-	-	■	■	-	-	-
Dimensions (mm) H x W x D											
Drawout	3P	439 x 441 x 395									
	4P	439 x 556 x 395									
Fixed	3P	352 x 422 x 297									
	4P	352 x 537 x 297									
Weight (kg) (approximate)											
Drawout	3P/4P	90/120									
Fixed	3P/4P	60/80									

(1) Except 4000

				Special applications				
	H2	H3	L1	NW H10	NW H2 with corrosion protection	NW10...NW40 N DC	H DC	NW earthing switch
	High-performance circuit breaker for heavy industry with high short-circuit currents	Incoming device with very high performance for critical applications	Limiting circuit breaker for protection of cable-type feeders or upgraded transformer ratings	1000 V systems, e.g. mines and wind power	Environments with high sulphur contents	DC system	DC system	Installation earthing
	100 kA	150 kA	150 kA	-	100 kA	-	-	-
	-	-	-	50 kA	-	-	-	-
	-	-	-	-	-	35 kA	85 kA	-
	Left or right	Left	Left	Left	Left or right	-	-	-
	F	-	-	-	-	F	F	-
	D	D	D	D	D	D	D	D
	Yes	Yes	No	Yes	Yes	Yes	Yes	Yes
	Yes up to 3200 A	Yes up to 3200 A	Yes up to 3200 A	No	Yes up to 3200 A	No	No	Yes up to 3200 A
	Yes	Yes	Yes	Yes	Yes	Yes	Yes	Yes
	A, E, P, H	A, E, P, H	A, E, P, H	A, E, consult us for P and H	A, E, P, H	DC Micrologic	DC Micrologic	-

	NW25, NW32, NW40				NW40b, NW50,NW63	
	H1	H2	H3	H10	H1	H2
	■ (1)	■ (1)	■ (1)	-	-	-
	■	■	■	■	■	■
	■ (1)	■ (1)	-	-	-	-
	■	■	-	-	■	■
					479 x 786 x 395	
					479 x 1016 x 395	
					352 x 767 x 297	
					352 x 997 x 297	
					225/300	
					120/160	

Circuit breakers and switch-disconnectors
NT06 to NT16

PB106365A49

Common characteristics		
Number of poles		3/4
Rated insulation voltage (V)	**Ui**	1000
Impulse withstand voltage (kV)	**Uimp**	12
Rated operational voltage (V AC 50/60 Hz)	**Ue**	690
Suitability for isolation	IEC 60947-2	
Degree of pollution	IEC 60664-1	3

Basic sweatchgear		
Circuit-breaker as per IEC 60947-2		
Rated current (A)	**In**	at 40 °C/50 °C [1]
Rating of 4th pole (A)		
Sensor ratings (A)		
Type of circuit breaker		
Ultimate breaking capacity (kA rms)	**Icu**	220/415 V
V AC 50/60 Hz		440 V
		525 V
		690 V
Rated service breaking capacity (kA rms)	**Ics**	% Icu
Utilisation category		
Rated short-time withstand current (kA rms)	**Icw**	0.5 s
V AC 50/60 Hz		1 s
		3 s
Integrated instantaneous protection (kA peak ±10 %)		
Rated making capacity (kA peak)	**Icm**	220/415 V
V AC 50/60 Hz		440 V
		525 V
		690 V
Break time (ms) between tripping order and arc extinction		
Closing time (ms)		
Circuit-breaker as per NEMA AB1		
Breaking capacity (kA)		240 V
V AC 50/60 Hz		480 V
		600 V

Switch-disconnector as per IEC 60947-3 and Annex A		
Type of switch-disconnector		
Rated making capacity (kA peak)	**Icm**	220 V
AC23A/AC3 category V AC 50/60 Hz		440 V
		525/690 V
Rated short-time withstand current (kA rms)	**Icw**	0.5 s
AC23A/AC3 category V AC 50/60 Hz		1 s
		3 s
Ultimate breaking capacity Icu (kA rms) with an external protection relay Maximum time delay: 350 ms		690 V

Mechanical and electrical durability as per IEC 60947-2/3 at In/Ie				
Service life	Mechanical	without maintenance		
C/O cycles x 1000				
Type of circuit breaker				
Rated current			**In (A)**	
C/O cycles x 1000	Electrical	without maintenance		440 V [4]
IEC 60947-2				690 V
Type of circuit breaker or switch-disconnector				
Rated operationnal current			**Ie (A)**	**AC23A**
C/O cycles x 1000	Electrical	without maintenance		440 V [4]
IEC 60947-3				690V
Type of circuit breaker or switch-disconnector				
Rated operationnal current			**Ie (A)**	**AC3** [5]
Motor power				380/415 V (kW)
				440 V (kW)
C/O cycles x 1000	Electrical	without maintenance		440 V [4]
IEC 60947-3 Annex M/IEC 60947-4-1				690 V

(1) 50 °C: rear vertical connected. Refer to temperature derating tables for other connection types.
(2) See the current-limiting curves in the "additional characteristics" section.
(3) SELLIM system.
(4) Available for 480 V NEMA.
(5) Suitable for motor control (direct-on-line starting).

Sensor selection

Sensor rating (A)	250 [1]	400	630	800	1000	1250	1600
Ir threshold setting(A)	100 to 250	160 to 400	250 to 630	320 to 800	400 to 1000	500 to 1250	640 to 1600

(1) For circuit-breaker NT02, please consult us.

	NT06			NT08			NT10			NT12		NT16	
	630			800			1000			1250		1600	
	630			800			1000			1250		1600	
	400 to 630			400 to 800			400 to 1000			630 to 1250		800 to 1600	
	H1	**H2**	**L1** [2]							**H1**	**H2**		
	42	50	150							42	50		
	42	50	130							42	50		
	42	42	100							42	42		
	42	42	25							42	42		
	100 %									100 %			
	B	B	A							B	B		
	42	36	10							42	36		
	42	36	-							42	36		
	24	20	-							24	20		
	-	90	10 x In [3]							-	90		
	88	105	330							88	105		
	88	105	286							88	105		
	88	88	220							88	88		
	88	88	52							88	88		
	25	25	9							25	25		
	< 50									< 50			
	42	50	150							42	50		
	42	50	100							42	50		
	42	42	25							42	42		
	HA									**HA**			
	75									75			
	75									75			
	75									75			
	36									36			
	36									36			
	20									20			
	36									36			
	12.5												
	H1	**H2**	**L1**	**H1**	**H2**	**L1**	**H1**	**H2**	**L1**	**H1**	**H2**	**H1**	**H2**
	630			**800**			**1000**			**1250**			
	6	6	3	6	6	3	6	6	3	6	6	3	3
	3	3	2	3	3	2	3	3	2	3	3	1	1
	H1/H2/HA												
	630			**800**			**1000**			**1250**		**1600**	
	6			6			6			6		3	
	3			3			3			3		1	
	H1/H2/HA												
	500			**630**			**800**			**1000**		**1000**	
	≤ 250			250 to 335			335 to 450			450 to 560		450 to 560	
	≤ 300			300 to 400			400 to 500			500 to 630		500 to 630	
	6												
	-												

Circuit breakers and switch-disconnectors

NW08 to NW63

PB106363A35

PB106362A65

Common characteristics		
Number of poles		3/4
Rated insulation voltage (V)	**Ui**	1000/1250
Impulse withstand voltage (kV)	**Uimp**	12
Rated operational voltage (V AC 50/60 Hz)	**Ue**	690/1150
Suitability for isolation	IEC 60947-2	
Degree of pollution	IEC 60664-1	4 (1000 V) / 3 (1250 V)
Basic circuit-breaker		
Circuit-breaker as per IEC 60947-2		
Rated current (A)		at 40 °C / 50 °C [1]
Rating of 4th pole (A)		
Sensor ratings (A)		
Type of circuit breaker		
Ultimate breaking capacity (kA rms) V AC 50/60 Hz	**Icu**	220/415/440 V 525 V 690 V 1150 V
Rated service breaking capacity (kA rms)	**Ics**	% Icu
Utilisation category		
Rated short-time withstand current (kA rms) V AC 50/60 Hz	**Icw**	1 s 3 s
Integrated instantaneous protection (kA peak ±10 %)		
Rated making capacity (kA peak) V AC 50/60 Hz	**Icm**	220/415/440 V 525 V 690 V 1150 V
Break time (ms) between tripping order and arc extinction		
Closing time (ms)		
Circuit-breaker as per NEMA AB1		
Breaking capacity (kA) V AC 50/60 Hz		240/480 V 600 V
Unprotected circuit-breaker		
Tripping by shunt trip as per IEC 60947-2		
Type of circuit breaker		
Ultimate breaking capacity (kA rms) V AC 50/60 Hz	**Icu**	220...690 V
Rated service breaking capacity (kA rms)	**Ics**	% Icu
Rated short-time withstand current (kA rms)	**Icw**	1 s 3 s
Overload and short-circuit protection External protection relay: short-circuit protection, maximum delay: 350 ms [4]		
Rated making capacity (kA peak) V AC 50/60 Hz	**Icm**	220...690 V
Switch-disconnector as per IEC 60947-3 and Annex A		
Type of switch-disconnector		
Rated making capacity (kA peak) **AC23A/AC3 category** V AC 50/60 Hz	**Icm**	220...690 V 1150 V
Rated short-time withstand current (kA rms) **AC23A/AC3 category** V AC 50/60 Hz	**Icw**	1 s 3 s
Earthing switch		
Latching capacity (kA peak)		135
Rating short time withstand (kA rms)	**Icw**	1 s 3 s

Mechanical and electrical durability as per IEC 60947-2/3 at In/Ie				
Service life	Mechanical	with maintenance		
C/O cycles x 1000		without maintenance		
Type of circuit breaker				
Rated current			**In (A)**	
C/O cycles x 1000 IEC 60947-2	Electrical	without maintenance		440 V [5] 690 V 1150 V
Type of circuit breaker or switch-disconnector				
Rated operational current			**Ie (A)**	**AC23A**
C/O cycles x 1000 IEC 60947-3	Electrical	without maintenance		440 V [5] 690 V
Type of circuit breaker or switch-disconnector				
Rated operational current			**Ie (A)**	**AC3** [6]
Motor power				380/415 V (kW) 440 V [5] (kW) 690 V (kW)
C/O cycles x 1000 IEC 60947-3 Annex M/IEC 60947-4-1	Electrical	without maintenance		440/690 V [5]

(1) 50 °C: rear vertical connected. Refer to temperature derating tables for other connection types.
(2) See the current-limiting curves in the "additional characteristics" section.
(3) Equipped with a trip unit with a making current of 90 kA peak.
(4) External protection must comply with permissible thermal constraints of the circuit breaker (please consult us). No fault-trip indication by the SDE or the reset button.
(5) Available for 480 V NEMA.
(6) Suitable for motor control (direct-on-line starting).
(7) The use of NW08 to NW20 H1 in IT systems is limited to 500 V network voltage.

Sensor selection

Sensor rating (A)	250 (1)	400	630	800	1000	1250	1600	2000	2500	3200	4000	5000	6300
Ir threshold setting(A)	100 to 250	160 to 400	250 to 630	320 to 800	400 to 1000	500 to 1250	630 to 1600	800 to 2000	1000 to 2500	1250 to 3200	1600 to 4000	2000 to 5000	2500 to 6300

(1) For circuit-breaker NW02 , please consult us.

	NW08	NW10	NW12	NW16		NW20					NW25	NW32	NW40		NW40b	NW50	NW63
	800	1000	1250	1600		2000					2500	3200	4000		4000	5000	6300
	800	1000	1250	1600		2000					2500	3200	4000		4000	5000	6300
	400 to 800	400 to 1000	630 to 1250	800 to 1600		1000 to 2000					1250 to 2500	1600 to 3200	2000 to 4000		2000 to 4000	2500 to 5000	3200 to 6300
	N1	**H1** (7)	**H2**	**L1** (2)	**H10**	**H1** (7)	**H2**	**H3**	**L1** (2)	**H10**	**H1**	**H2**	**H3**	**H10**	**H1**	**H2**	
	42	65	100	150	-	65	100	150	150	-	65	100	150	-	100	150	
	42	65	85	130	-	65	85	130	130	-	65	85	130	-	100	130	
	42	65	85	100	-	65	85	100	100	-	65	85	100	-	100	100	
	-	-	-	-	50	-	-	-	-	50	-	-	-	50	-	-	
	100 %					100 %					100 %				100 %		
	B					B					B				B		
	42	65	85	30	50	65	85	65	30	50	65	85	65	50	100	100	
	22	36	50	30	50	36	75	65	30	50	65	75	65	50	100	100	
	-	-	190	80	-	-	190	150	80	-	-	190	150	-	-	270	
	88	143	220	330	-	143	220	330	330	-	143	220	330	-	220	330	
	88	143	187	286	-	143	187	286	286	-	143	187	286	-	220	286	
	88	143	187	220	-	143	187	220	220	-	143	187	220	-	220	220	
	-	-	-	-	105	-	-	-	-	105	-	-	-	105	-	-	
	25	25	25	10	25	25	25	25	10	25	25	25	25	25	25	25	
	< 70					< 70					< 70				< 80		
	42	65	100	150	-	65	100	150	150	-	65	100	150	-	100	150	
	42	65	85	100	-	65	85	100	100	-	65	85	100	-	100	100	
		HA	**HF** (3)			**HA**	**HF** (3)				**HA**	**HF** (3)			**HA**		
		50	85			50	85				55	85			85		
		100 %				100 %					100 %				100 %		
		50	85			50	85				55	85			85		
		36	50			36	75				55	75			85		
		-	-			-	-				-	-			-		
		105	187			105	187				121	187			187		

	NW08/NW10/NW12/NW16				NW20			NW25/NW32/NW40			NW40b/NW50/NW63	
	NA	**HA**	**HF**	**HA10**	**HA**	**HF**	**HA10**	**HA**	**HF**	**HA10**	**HA**	
	88	105	187	-	105	187	-	121	187	-	187	
	-	-	-	105	-	-	105	-	-	105	-	
	42	50	85	50	50	85	50	55	85	50	85	
	-	36	50	50	36	75	50	55	75	50	85	
	60 Hz											
	50 Hz											
	25				20						10	
	12.5				10						5	
	N1/H1/H2	**L1**	**H10**		**H1/H2**	**H3**	**L1**	**H10**	**H1/H2**	**H3**	**H10**	**H1**	**H2**
	800/1000/1250/1600				**2000**				**2500/3200/4000**			**4000b/5000/6300**	
	10	3	-		8	2	3	-	5	1.25	-	1.5	1.5
	10	3	-		6	2	3	-	2.5	1.25	-	1.5	1.5
	-	-	0.5		-	-	-	0.5	-	-	0.5	-	-
	H1/H2/NA/HA/HF				**H1/H2/H3/HA/HF**				**H1/H2/H3/HA/HF**			**H1/H2/HA**	
	800/1000/1250/1600				**2000**				**2500/3200/4000**			**4000b/5000/6300**	
	10				8				5			1.5	
	10				6				2.5			1.5	
	H1/H2/NA/HA/HF				**H1/H2/H3/HA/HF**								
	800	**1000**	**1250**	**1600**	**2000**								
	335 to 450	450 to 560	560 to 670	670 to 900	900 to 1150								
	400 to 500	500 to 630	500 to 800	800 to 1000	1000 to 1300								
	≤ 800	800 to 1000	1000 to 1250	1250 to 1600	1600 to 2000								
	6												

Micrologic control units
Overview of functions

All Masterpact circuit breakers are equipped with a Micrologic control unit that can be changed on site. Control units are designed to protect Power circuits and loads. Alarms may be programmed for remote indications.
Measurements of current, voltage, frequency, power and power quality optimise continuity of service and energy management.

Dependability
Integration of protection functions in an ASIC electronic component used in all Micrologic control units guarantees a high degree of reliability and immunity to conducted or radiated disturbances.
On Micrologic A, E, P and H control units, advanced functions are managed by an independent microprocessor.

Accessories
Certain functions require the addition of Micrologic control unit accessories, described on page A-25.
The rules governing the various possible combinations can be found in the documentation accessible via the Products and services menu of the www.schneider-electric.com web site.

Micrologic name codes

2.0 E
X Y Z

X: type of protection
- 2 for basic protection
- 5 for selective protection
- 6 for selective + earth-fault protection
- 7 for selective + earth-leakage protection.

Y: control-unit generation
Identification of the control-unit generation.
“0” signifies the first generation.

Z: type of measurement
- A for “ammeter”
- E for “energy”
- P for “power meter”
- H for “harmonic meter”.

PB100772-32

PB106351A32

Current protection

Micrologic 2: basic protection

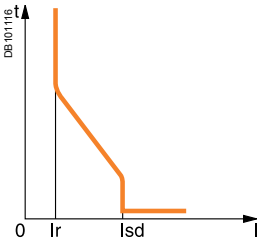

Protection:
long time
+ instantaneous

Micrologic 5: selective protection

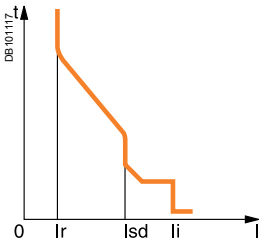

Protection:
long time
+ short time
+ instantaneous

Micrologic 6: selective + earth-fault protection

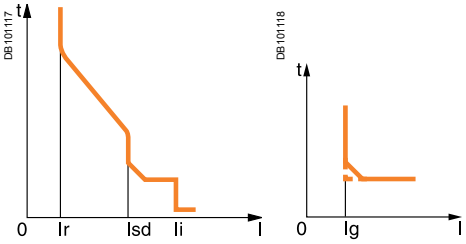

Protection:
long time
+ short time
+ instantaneous
+ earth fault

Micrologic 7: selective + earth-leakage protection

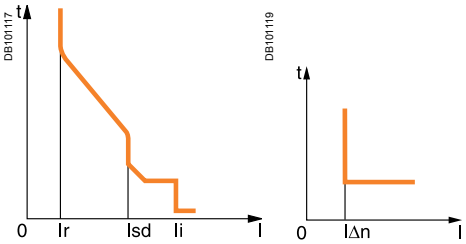

Protection:
long time
+ short time
+ instantaneous
+ earth leakage up to 3200A

Measurements and programmable protection

A: ammeter

- I_1, I_2, I_3, I_N, $I_{earth\text{-}fault}$, $I_{earth\text{-}leakage}$ and maximeter for these measurements
- fault indications
- settings in amperes and in seconds.

E: Energy

- incorporates all the rms measurements of Micrologic A, plus voltage, power factor, power and energy metering measurements.
  - calculates the current demand value
  - "Quickview" function for the automatic cyclical display of the most useful values (as standard or by selection).

P: A + power meter + programmable protection

- measurements of V, A, W, VAR, VA, Wh, VARh, VAh, Hz, V_{peak}, A_{peak}, power factor and maximeters and minimeters
- IDMTL long-time protection, minimum and maximum voltage and frequency, voltage and current imbalance, phase sequence, reverse power
- load shedding and reconnection depending on power or current
- measurements of interrupted currents, differentiated fault indications, maintenance indications, event histories and time-stamping, etc.

H: P + harmonics

- power quality: fundamentals, distortion, amplitude and phase of harmonics up to the 31st order
- waveform capture after fault, alarm or on request
- enhanced alarm programming: thresholds and actions.

2.0 A

2.0 E

5.0 A

5.0 E

5.0 P

5.0 H

6.0 A

6.0 E

6.0 P

6.0 H

7.0 A

7.0 P

7.0 H

Micrologic control units
Micrologic A “ammeter”

Micrologic A control units protect power circuits. They also offer measurements, display, communication and current maximeters. Version 6 provides earth-fault protection, version 7 provides earth-leakage protection.

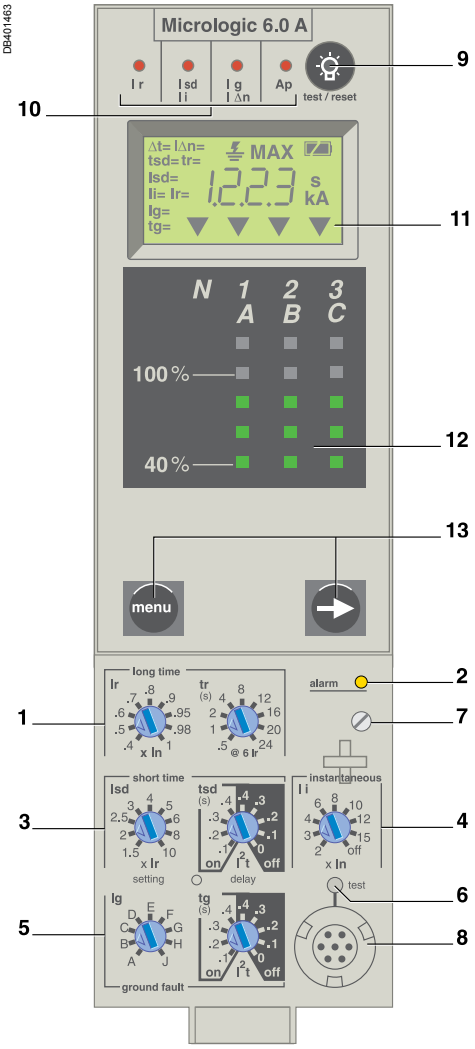

1 long-time threshold and tripping delay
2 overload alarm (LED) at 1,125 Ir
3 short-time pick-up and tripping delay
4 instantaneous pick-up
5 earth-leakage or earth-fault pick-up and tripping delay
6 earth-leakage or earth-fault test button
7 long-time rating plug screw
8 test connector
9 lamp test, reset and battery test
10 indication of tripping cause
11 digital display
12 three-phase bargraph and ammeter
13 navigation buttons

Note: *Micrologic A control units come with a transparent lead-seal cover as standard.*

"Ammeter" measurements
Micrologic A control units measure the true (rms) value of currents.
They provide continuous current measurements from 0.2 to 1.2 In and are accurate to within 1.5 % (including the sensors).
A digital LCD screen continuously displays the most heavily loaded phase (Imax) or displays the I_1, I_2, I_3, I_N, I_g, $I\Delta_n$, stored-current (maximeter) and setting values by successively pressing the navigation button.
The optional external power supply makes it possible to display currents < 20 % In. Below 0.1 In, measurements are not significant. Between 0.1 and 0.2 In, accuracy changes linearly from 4 % to 1.5 %.

Communication option
In conjunction with the COM communication option, the control unit transmits the following:
- settings
- all “ammeter” measurements
- tripping causes
- maximeter readings.

Protection
Protection thresholds and delays are set using the adjustment dials.

Overload protection
True rms long-time protection.
Thermal memory: thermal image before and after tripping.
Setting accuracy may be enhanced by limiting the setting range using a different long-time rating plug.
Overload protection can be cancelled using a specific LT rating plug "Off".

Short-circuit protection
Short-time (rms) and instantaneous protection.
Selection of I^2t type (ON or OFF) for short-time delay.

Earth-fault protection
Residual or source ground return earth fault protection.
Selection of I^2t type (ON or OFF) for delay.

Residual earth-leakage protection (Vigi).
Operation without an external power supply.
⎍ Protected against nuisance tripping.
⩘ DC-component withstand class A up to 10 A.

Neutral protection
On three-pole circuit breakers, neutral protection is not possible.
On four-pole circuit breakers, neutral protection may be set using a three-position switch: neutral unprotected (4P 3d), neutral protection at 0.5 Ir (4P 3d + N/2), neutral protection at Ir (4P 4d).

Zone selective interlocking (ZSI)
A ZSI terminal block may be used to interconnect a number of control units to provide total discrimination for short-time and earth-fault protection, without a delay before tripping.

Overload alarm
A yellow alarm LED goes on when the current exceeds the long-time trip threshold.

Fault indications
LEDs indicate the type of fault:
- overload (long-time protection Ir)
- short-circuit (short-time Isd or instantaneous Ii protection)
- earth fault or earth leakage (Ig or IΔn)
- internal fault (Ap).

Battery power
The fault indication LEDs remain on until the test/reset button is pressed. Under normal operating conditions, the battery supplying the LEDs has a service life of approximately 10 years.

Test
A mini test kit or a portable test kit may be connected to the test connector on the front to check circuit-breaker operation. For Micrologic 6.0 A and 7.0 A control units, the operation of earth-fault or earth-leakage protection can be checked by pressing the test button located above the test connector.

Protection — Micrologic 2.0 A

Long time											
Current setting (A)			0.4	0.5	0.6	0.7	0.8	0.9	0.95	0.98	1
Tripping between 1.05 and 1.20 x Ir			Other ranges or disable by changing long-time rating plug								
Time setting		**tr (s)**	0.5	1	2	4	8	12	16	20	24
Time delay (s)	Accuracy: 0 to -30 %	1.5 x Ir	12.5	25	50	100	200	300	400	500	600
	Accuracy: 0 to -20 %	6 x Ir	0.7(1)	1	2	4	8	12	16	20	24
	Accuracy: 0 to -20 %	7.2 x Ir	0.7(2)	0.69	1.38	2.7	5.5	8.3	11	13.8	16.6
Thermal memory			20 minutes before and after tripping								
(1) 0 to -40 % - (2) 0 to -60 %											
Instantaneous											
Pick-up (A)	**Isd** = Ir x …		1.5	2	2.5	3	4	5	6	8	10
Accuracy: ±10 %											
Time delay			Max resettable time: 20 ms Max break time: 80 ms								

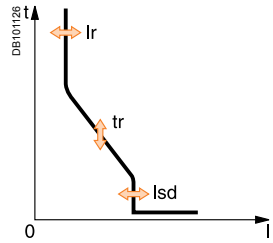

Protection — Micrologic 5.0 / 6.0 / 7.0 A

Long time			**Micrologic 5.0 / 6.0 / 7.0 A**								
Current setting (A)	**Ir** = In x …		0.4	0.5	0.6	0.7	0.8	0.9	0.95	0.98	1
Tripping between 1.05 and 1.20 x Ir			Other ranges or disable by changing long-time rating plug								
Time setting		**tr (s)**	0.5	1	2	4	8	12	16	20	24
Time delay (s)	Accuracy: 0 to -30 %	1.5 x Ir	12.5	25	50	100	200	300	400	500	600
	Accuracy: 0 to -20 %	6 x Ir	0.7(1)	1	2	4	8	12	16	20	24
	Accuracy: 0 to -20 %	7.2 x Ir	0.7(2)	0.69	1.38	2.7	5.5	8.3	11	13.8	16.6
Thermal memory			20 minutes before and after tripping								
(1) 0 to -40 % - (2) 0 to -60 %											
Short time											
Pick-up (A)	**Isd** = Ir x …		1.5	2	2.5	3	4	5	6	8	10
Accuracy: ±10 %											
Time setting tsd (s)	Settings	I²t Off	0	0.1	0.2	0.3	0.4				
		I²t On	-	0.1	0.2	0.3	0.4				
Time delay (ms) at 10 x Ir	**tsd** (max resettable time)		20	80	140	230	350				
(I²t Off or I²t On)	**tsd** (max break time)		80	140	200	320	500				
Instantaneous											
Pick-up (A)	**Ii** = In x …		2	3	4	6	8	10	12	15	off
Accuracy: ±10 %											
Time delay			Max resettable time: 20 ms Max break time: 50 ms								

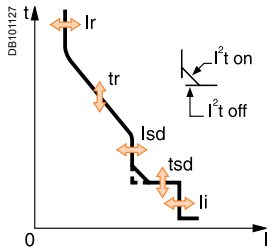

Earth fault			**Micrologic 6.0 A**								
Pick-up (A)	**Ig** = In x …		A	B	C	D	E	F	G	H	J
Accuracy: ±10 %	In ≤ 400 A		0.3	0.3	0.4	0.5	0.6	0.7	0.8	0.9	1
	400 A < In < 1250 A		0.2	0.3	0.4	0.5	0.6	0.7	0.8	0.9	1
	In ≥ 1250 A		500	640	720	800	880	960	1040	1120	1200
Time setting tg (s)	Settings	I²t Off	0	0.1	0.2	0.3	0.4				
		I²t On	-	0.1	0.2	0.3	0.4				
Time delay (ms)	**tg** (max resettable time)		20	80	140	230	350				
at In or 1200 A (I²t Off or I²t On)	**tg** (max break time)		80	140	200	320	500				

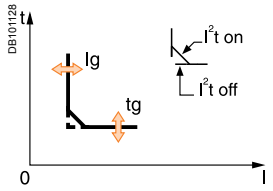

Residual earth leakage (Vigi)		**Micrologic 7.0 A**								
Sensitivity (A)	**IΔn**	0.5	1	2	3	5	7	10	20	30
Accuracy: 0 to -20 %										
Time delay Δt (ms)	Settings	60	140	230	350	800				
	Δt (max resettable time)	60	140	230	350	800				
	Δt (max break time)	140	200	320	500	1000				

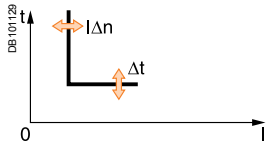

Ammeter — Micrologic 2.0 / 5.0 / 6.0 / 7.0 A

Type of measurements		Range	Accuracy
Instantaneous currents	I1, I2, I3, IN	0.2 x In to 1.2 x In	± 1.5 %
	Ig (6.0 A)	0.2 x In to In	± 10 %
	IΔn (7.0 A)	0 to 30 A	± 1.5 %
Current maximeters of	I1, I2, I3, IN	0.2 x In to 1.2 x In	± 1.5 %

Note: all current-based protection functions require no auxiliary source.
The test / reset button resets maximeters, clears the tripping indication and tests the battery.

Micrologic control units
Micrologic E "energy"

Micrologic E control units protect power circuits. They also offer measurements, display, communication and current maximeters. Version 6 provides earth-fault protection.

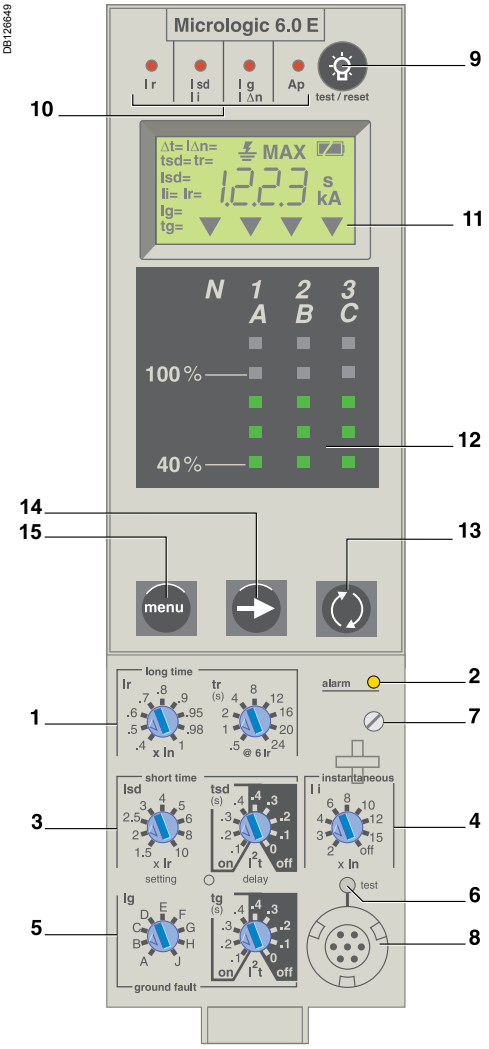

1 long-time threshold and tripping delay
2 overload alarm (LED) at 1,125 Ir
3 short-time pick-up and tripping delay
4 instantaneous pick-up
5 earth-leakage or earth-fault pick-up and tripping delay
6 earth-leakage or earth-fault test button
7 long-time rating plug screw
8 test connector
9 lamp test, reset and battery test
10 indication of tripping cause
11 digital display
12 three-phase bargraph and ammeter
13 navigation button "quick View" (only with Micrologic E)
14 navigation button to view menu contents
15 navigation button to change menu

(1) Display on FDM121 only.

***Note:** Micrologic E control units come with a transparent lead-seal cover as standard.*

"Energy meter" measurements

In addition to the ammeter measurements of Micrologic A
Micrologic E control units measure and display:
- current demand
- voltages: phase to phase, phase to neutral, average (1) and unbalanced (1)
- instantaneous power: P, Q, S
- power factor: PF
- power demand: P demand
- energy: Ep, Eq (1), Es (1).

Accuracy of active energy Ep is 2 % (including the sensors). The range of measurement is the same as current with Micrologic A, depending of an external power supply module (24 V DC).

Communication option
In conjunction with the COM communication option, the control unit transmits the following:
- settings
- all "ammeter" and "energy" measurements
- enable connection to FDM121
- tripping causes
- maximeter / minimeter readings.

Protection
Protection thresholds and delays are set using the adjustment dials.

Overload protection
True rms long-time protection.
Thermal memory: thermal image before and after tripping.
Setting accuracy may be enhanced by limiting the setting range using a different long-time rating plug. Overload protection can be cancelled using a specific LT rating plug "Off".

Short-circuit protection
Short-time (rms) and instantaneous protection.
Selection of I^2t type (ON or OFF) for short-time delay.

Earth-fault protection
Source ground return earth fault protection.
Selection of I^2t type (ON or OFF) for delay.

Neutral protection
On three-pole circuit breakers, neutral protection is not possible.
On four-pole circuit breakers, neutral protection may be set using a three-position switch: neutral unprotected (4P 3d), neutral protection at 0.5 Ir (4P 3d + N/2), neutral protection at Ir (4P 4d).

Zone selective interlocking (ZSI)
A ZSI terminal block may be used to interconnect a number of control units to provide total discrimination for short-time and earth-fault protection, without a delay before tripping.

Overload alarm
A yellow alarm LED goes on when the current exceeds the long-time trip threshold.

M2C programmable contacts
The M2C (two contacts) programmable contacts may be used to signal envents (Ir, Isd, Alarm Ir, Alarm Ig, Ig). They can be programmed using the keypad on the Micrologic E control unit or remotely using the COM option (BCM ULP).

Fault indications
LEDs indicate the type of fault:
- overload (long-time protection Ir)
- short-circuit (short-time Isd or instantaneous Ii protection)
- earth fault (Ig)
- internal fault (Ap).

Trip history
The trip history displays the list of the last 10 trips. For each trip, the following indications are recorded and displayed:
- the tripping cause: Ir, Isd, Ii, Ig or Auto-protection (Ap) trips
- the date and time of the trip (requires communication option).

Battery power
The fault indication LEDs remain on until the test/reset button is pressed. Under normal operating conditions, the battery supplying the LEDs has a service life of approximately 10 years.

Test
A mini test kit or a portable test kit may be connected to the test connector on the front to check circuit-breaker operation. For Micrologic 6.0 E control units, the operation of earth-fault or earth-leakage protection can be checked by pressing the test button located above the test connector.

Protection — Micrologic 2.0 E

Long time											
Current setting (A)			0.4	0.5	0.6	0.7	0.8	0.9	0.95	0.98	1
Tripping between 1.05 and 1.20 x Ir			Other ranges or disable by changing long-time rating plug								
Time setting		**tr (s)**	0.5	1	2	4	8	12	16	20	24
Time delay (s)	Accuracy: 0 to -30 %	1.5 x Ir	12.5	25	50	100	200	300	400	500	600
	Accuracy: 0 to -20 %	6 x Ir	0.7(1)	1	2	4	8	12	16	20	24
	Accuracy: 0 to -20 %	7.2 x Ir	0.7(2)	0.69	1.38	2.7	5.5	8.3	11	13.8	16.6
Thermal memory			20 minutes before and after tripping								
(1) 0 to -40 % - (2) 0 to -60 %											
Instantaneous											
Pick-up (A)	**Isd** = Ir x …		1.5	2	2.5	3	4	5	6	8	10
Accuracy: ±10 %											
Time delay			Max resettable time: 20 ms Max break time: 80 ms								

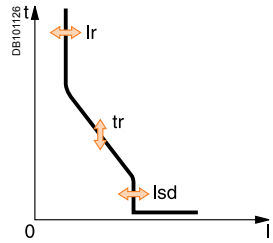

Protection — Micrologic 5.0 / 6.0 E

Long time			**Micrologic 5.0 / 6.0 E**								
Current setting (A)	**Ir** = In x …		0.4	0.5	0.6	0.7	0.8	0.9	0.95	0.98	1
Tripping between 1.05 and 1.20 x Ir			Other ranges or disable by changing long-time rating plug								
Time setting		**tr (s)**	0.5	1	2	4	8	12	16	20	24
Time delay (s)	Accuracy: 0 to -30 %	1.5 x Ir	12.5	25	50	100	200	300	400	500	600
	Accuracy: 0 to -20 %	6 x Ir	0.7(1)	1	2	4	8	12	16	20	24
	Accuracy: 0 to -20 %	7.2 x Ir	0.7(2)	0.69	1.38	2.7	5.5	8.3	11	13.8	16.6
Thermal memory			20 minutes before and after tripping								
(1) 0 to -40 % - (2) 0 to -60 %											
Short time											
Pick-up (A)	**Isd** = Ir x …		1.5	2	2.5	3	4	5	6	8	10
Accuracy: ±10 %											
Time setting tsd (s)	Settings	I²t Off	0	0.1	0.2	0.3	0.4				
		I²t On	-	0.1	0.2	0.3	0.4				
Time delay (ms) at 10 x Ir	**tsd** (max resettable time)		20	80	140	230	350				
(I²t Off or I²t On)	**tsd** (max break time)		80	140	200	320	500				
Instantaneous											
Pick-up (A)	**Ii** = In x …		2	3	4	6	8	10	12	15	off
Accuracy: ±10 %											
Time delay			Max resettable time: 20 ms Max break time: 50 ms								

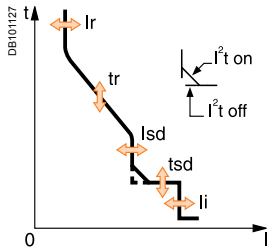

Earth fault			**Micrologic 6.0 E**								
Pick-up (A)	**Ig** = In x …		A	B	C	D	E	F	G	H	J
Accuracy: ±10 %	In ≤ 400 A		0.3	0.3	0.4	0.5	0.6	0.7	0.8	0.9	1
	400 A < In < 1250 A		0.2	0.3	0.4	0.5	0.6	0.7	0.8	0.9	1
	In ≥ 1250 A		500	640	720	800	880	960	1040	1120	1200
Time setting tg (s)	Settings	I²t Off	0	0.1	0.2	0.3	0.4				
		I²t On	-	0.1	0.2	0.3	0.4				
Time delay (ms)	**tg** (max resettable time)		20	80	140	230	350				
at In or 1200 A (I²t Off or I²t On)	**tg** (max break time)		80	140	200	320	500				

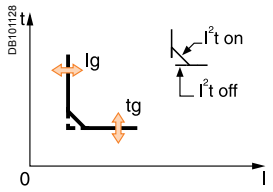

Energy — Micrologic 2.0 / 5.0 / 6.0 E

Type of measurements		Range	Accuracy
Instantaneous currents	I1, I2, I3, IN	0.2 x In to 1.2 x In	± 1.5 %
	Ig (6.0 E)	0.05 x In to In	± 10 %
Current maximeters of	I1, I2, I3, IN	0.2 x In to 1.2 x In	± 1.5 %
Demand currents of I1, I2, I3, Ig		0.2 x In to 1.2 x In	± 1.5 %
Voltages	V12, V23, V31, V1N, V2N, V3N	100 to 690 V	± 0.5 %
Active power	P	30 to 2000 kW	± 2 %
Power factor	PF	0 to 1	± 2 %
Demand power	P demand	30 to 2000 kW	± 2 %
Active energy	Ep	-10^{10} GWh to 10^{10} GWh	± 2 %

Note: all current-based protection functions require no auxiliary source.
The test / reset button resets maximeters, clears the tripping indication and tests the battery.

Micrologic control units
Micrologic P “power”

Micrologic P control units include all the functions offered by Micrologic A.
In addition, they measure voltages and calculate power and energy values.
They also offer new protection functions based on currents, voltages, frequency and power reinforce load protection in real time.

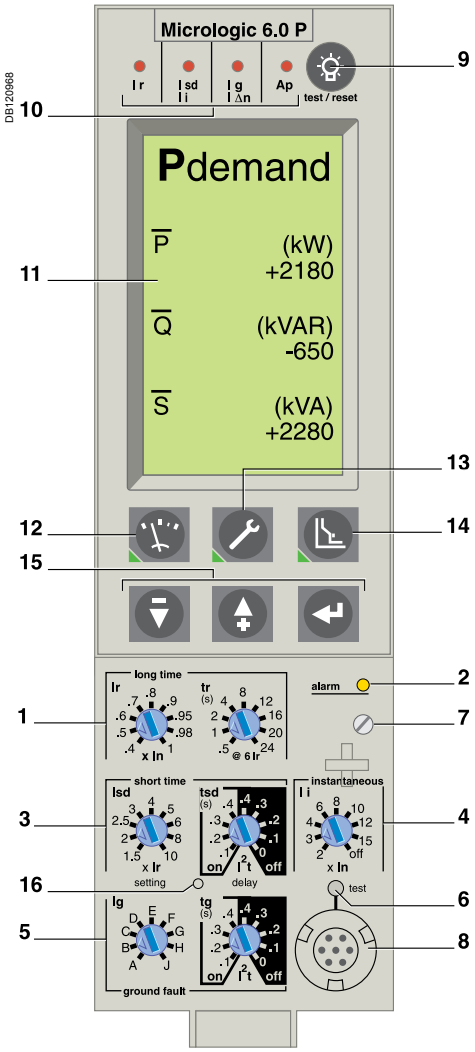

1 Long-time current setting and tripping delay.
2 Overload signal (LED).
3 Short-time pick-up and tripping delay.
4 Instantaneous pick-up.
5 Earth-leakage or earth-fault pick-up and tripping delay.
6 Earth-leakage or earth-fault test button.
7 Long-time rating plug screw.
8 Test connector.
9 Lamp + battery test and indications reset.
10 Indication of tripping cause.
11 High-resolution screen.
12 Measurement display.
13 Maintenance indicators.
14 Protection settings.
15 Navigation buttons.
16 Hole for settings lockout pin on cover.

Note: *Micrologic P control units come with a non-transparent lead-seal cover as standard.*

Protection

Protection settings
The adjustable protection functions are identical to those of Micrologic A (overloads, short-circuits, earth-fault and earth-leakage protection).

Fine adjustment
Within the range determined by the adjustment dial, fine adjustment of thresholds (to within one ampere) and time delays (to within one second) is possible on the keypad or remotely using the COM option (BCM ULP).

IDMTL (Inverse Definite Minimum Time lag) setting
Coordination with fuse-type or medium-voltage protection systems is optimised by adjusting the slope of the overload-protection curve. This setting also ensures better operation of this protection function with certain loads.

Neutral protection
On three-pole circuit breakers, neutral protection may be set using the keypad or remotely using the COM option (BCM ULP), to one of four positions: neutral unprotected (4P 3d), neutral protection at 0.5 Ir (4P 3d + N/2), neutral protection at Ir (4P 4d) and neutral protection at 1,6 Ir (4P 3d + 1,6N). Neutral protection at 1,6 Ir is used when the neutral conductor is twice the size of the phase conductors (major load imbalance, high level of third order harmonics).
On four-pole circuit breakers, neutral protection may be set using a three-position switch or the keypad: neutral unprotected (4P 3d), neutral protection at 0.5 Ir (4P 3d + N/2), neutral protection at Ir (4P 4d). Neutral protection produces no effect if the long-time curve is set to one of the IDMTL protection settings.

Programmable alarms and other protection
Depending on the thresholds and time delays set using the keypad or remotely using the COM option (BCM ULP), the Micrologic P control unit monitors currents and voltage, power, frequency and the phase sequence. Each threshold overrun is signalled remotely via the COM option (BCM ULP). Each threshold overrun may be combined with tripping (protection) or an indication carried out by an optional M2C or M6C programmable contact (alarm), or both (protection and alarm).

Load shedding and reconnection
Load shedding and reconnection parameters may be set according to the power or the current flowing through the circuit breaker. Load shedding is carried out by a supervisor via the COM option (BCM ULP) or by an M2C or M6C programmable contact.

M2C / M6C programmable contacts
The M2C (two contacts) and M6C (six contacts) auxiliary contacts may be used to signal threshold overruns or status changes. They can be programmed using the keypad on the Micrologic P control unit or remotely using the COM option (BCM ULP).

Communication option (COM)
The communication option may be used to:
- remotely read and set parameters for the protection functions
- transmit all the calculated indicators and measurements
- signal the causes of tripping and alarms
- consult the history files and the maintenance-indicator register.
- maximeter reset.

An event log and a maintenance register, stored in control-unit memory but not available locally, may be accessed in addition via the COM option (BCM ULP).

Protection — Micrologic 5.0 / 6.0 / 7.0 P

Long time (rms)			**Micrologic 5.0 / 6.0 / 7.0 P**								
Current setting (A)	**Ir** = In x …		0.4	0.5	0.6	0.7	0.8	0.9	0.95	0.98	1
Tripping between 1.05 and 1.20 x Ir			Other ranges or disable by changing long-time rating plug								
Time setting		**tr (s)**	0.5	1	2	4	8	12	16	20	24
Time delay (s)	Accuracy: 0 to -30 %	1.5 x Ir	12.5	25	50	100	200	300	400	500	600
	Accuracy: 0 to -20 %	6 x Ir	0.7(1)	1	2	4	8	12	16	20	24
	Accuracy: 0 to -20 %	7.2 x Ir	0.7(2)	0.69	1.38	2.7	5.5	8.3	11	13.8	16.6
IDMTL setting	Curve slope		SIT	VIT	EIT	HVFuse	DT				
Thermal memory			20 minutes before and after tripping								
(1) 0 to -40 % - (2) 0 to -60 %											
Short time (rms)											
Pick-up (A)	**Isd** = Ir x …		1.5	2	2.5	3	4	5	6	8	10
Accuracy: ±10 %											
Time setting tsd (s)	Settings	I^2t Off	0	0.1	0.2	0.3	0.4				
		I^2t On	-	0.1	0.2	0.3	0.4				
Time delay (ms) at 10 Ir	**tsd** (max resettable time)		20	80	140	230	350				
(I^2t Off or I^2t On)	**tsd** (max break time)		80	140	200	320	500				
Instantaneous											
Pick-up (A)	**Ii** = In x …		2	3	4	6	8	10	12	15	off
Accuracy: ±10 %											
Time delay			Max resettable time: 20 ms Max break time: 50 ms								
Earth fault			**Micrologic 6.0 P**								
Pick-up (A)	**Ig** = In x …		A	B	C	D	E	F	G	H	J
Accuracy: ±10 %	In ≤ 400 A		0.3	0.3	0.4	0.5	0.6	0.7	0.8	0.9	1
	400 A < In < 1250 A		0.2	0.3	0.4	0.5	0.6	0.7	0.8	0.9	1
	In ≥ 1250 A		500	640	720	800	880	960	1040	1120	1200
Time setting tg (s)	Settings	I^2t Off	0	0.1	0.2	0.3	0.4				
		I^2t On	-	0.1	0.2	0.3	0.4				
Time delay (ms)	**tg** (max resettable time)		20	80	140	230	350				
at In or 1200 A (I^2t Off or I^2t On)	**tg** (max break time)		80	140	200	320	500				
Residual earth leakage (Vigi)			**Micrologic 7.0 P**								
Sensitivity (A)	**IΔn**		0.5	1	2	3	5	7	10	20	30
Accuracy: 0 to -20 %											
Time delay Δt (ms)	Settings		60	140	230	350	800				
	Δt (max resettable time)		60	140	230	350	800				
	Δt (max break time)		140	200	320	500	1000				

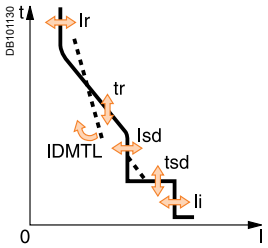

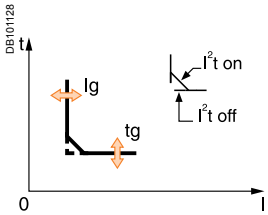

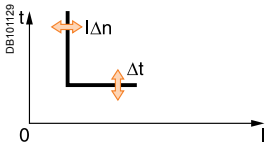

Alarms and other protection — Micrologic 5.0 / 6.0 / 7.0 P

Current		**Threshold**	**Delay**
Current unbalance	**Iunbalance**	0.05 to 0.6 Iaverage	1 to 40 s
Max. demand current	**Imax demand** : I1, I2, I3, IN,	0.2 In to In	15 to 1500 s
Earth fault alarm			
	I⏚	10 to 100 % In(3)	1 to 10 s
Voltage			
Voltage unbalance	**Uunbalance**	2 to 30 % x Uaverage	1 to 40 s
Minimum voltage	**Umin**	100 to Umax between phases	1.2 to 10 s
Maximum voltage (4)	**Umax**	Umin to 1200 between phases	1.2 to 10 s
Power			
Reverse power	**rP**	5 to 500 kW	0.2 to 20 s
Frequency			
Minimum frequency	**Fmin**	45 to Fmax	1.2 to 5 s
Maximum frequency	**Fmax**	Fmin to 440 Hz	1.2 to 5 s
Phase sequence			
Sequence (alarm)	**ΔØ**	Ø1/2/3 or Ø1/3/2	0.3 s

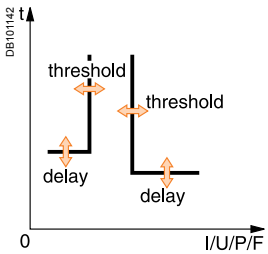

Load shedding and reconnection — Micrologic 5.0 / 6.0 / 7.0 P

Measured value		**Threshold**	**Delay**
Current	**I**	0.5 to 1 Ir per phases	20 % tr to 80 % tr
Power	**P**	200 kW to 10 MW	10 to 3600 s

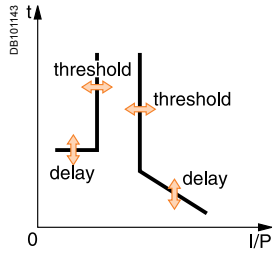

(3) In ≤ 400 A 30 %
400 A < In < 1250 A 20 %
In ≥ 1250 A 10 %
(4) For 690 V applications, a step-down transformer must be used if the voltage exceeds the nominal value of 690 V by more than 10 %.

Note: all current-based protection functions require no auxiliary source.
Voltage-based protection functions are connected to AC power via a voltage measurement input built into the circuit breaker.

Micrologic control units

Micrologic P “power”

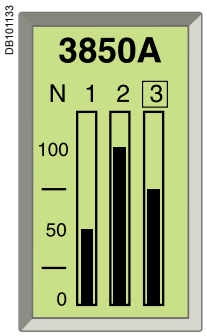

Default display.

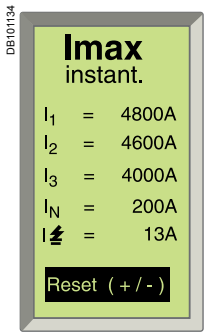

Display of a maximum current

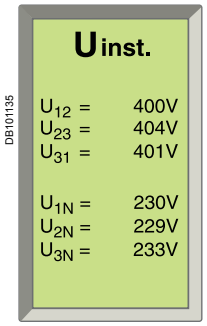

Display of a voltage.

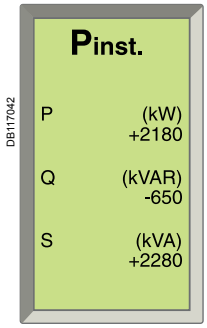

Display of a power.

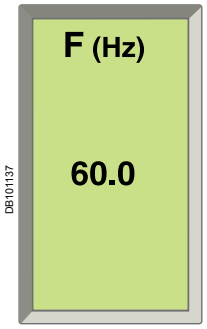

Display of a frequency.

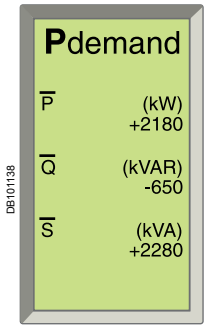

Display of a demand power.

Ion software.

Measurements

The Micrologic P control unit calculates in real time all the electrical values (V, A, W, VAR, VA, Wh, VARh, VAh, Hz), power factors and cosφ factors.
The Micrologic P control unit also calculates demand current and demand power over an adjustable time period. Each measurement is associated with a minimeter and a maximeter.
In the event of tripping on a fault, the interrupted current is stored. The optional external power supply makes it possible to display the value with the circuit breaker open or not supplied.

Instantaneous values

The value displayed on the screen is refreshed every second.
Minimum and maximum values of measurements are stored in memory (minimeters and maximeters).

Currents					
I rms	A	1	2	3	N
	A	E-fault		E-leakage	
I max rms	A	1	2	3	N
	A	E-fault		E-leakage	
Voltages					
U rms	V	12	23	31	
V rms	V	1N	2N	3N	
U average rms	V	(U12 + U23 + U31) / 3			
U unbalance	%				
Power, energy					
P active, Q reactive, S apparent	W, Var, VA	Totals			
E active, E reactive, E apparent	Wh, VARh, VAh	Totals consumed - supplied Totals consumed Totals supplied			
Power factor	PF	Total			
Frequencies					
F	Hz				

Demand metering

The demand is calculated over a fixed or sliding time window that may be programmed from 5 to 60 minutes. According to the contract signed with the power supplier, an indicator associated with a load shedding function makes it possible to avoid or minimise the costs of overrunning the subscribed power. Maximum demand values are systematically stored and time stamped (maximeter).

Currents					
I demand	A	1	2	3	N
	A	E-fault		E-leakage	
I max demand	A	1	2	3	N
	A	E-fault		E-leakage	
Power					
P, Q, S demand	W, Var, VA	Totals			
P, Q, S max demand	W, Var, VA	Totals			

Minimeters and maximeters

Only the current and power maximeters may be displayed on the screen.

Time-stamping

Time-stamping is activated as soon as time is set manually or by a supervisor.
No external power supply module is required (max. drift of 1 hour per year).

Reset

An individual reset, via the keypad or remotely, acts on alarms, minimum and maximum data, peak values, the counters and the indicators.

Additional measurements accessible with the COM option (BCM ULP)

Some measured or calculated values are only accessible with the COM communication option:
- $I_{peak} / \sqrt{2}$, $(I_1 + I_2 + I_3)/3$, $I_{unbalance}$
- load level in % Ir
- total power factor.

The maximeters and minimeters are available only via the COM option (BCM ULP) for use with a supervisor.

Additional info

Accuracy of measurements (including sensors):
- *voltage (V) 0.5 %*
- *current (A) 1.5 %*
- *frequency (Hz) 0.1 %*
- *power (W) and energy (Wh) 2 %.*

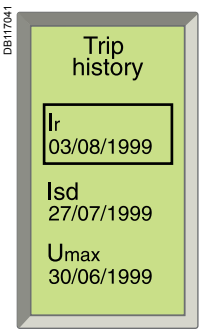

Display of a tripping history.

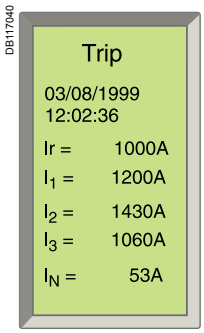

Display after tripping.

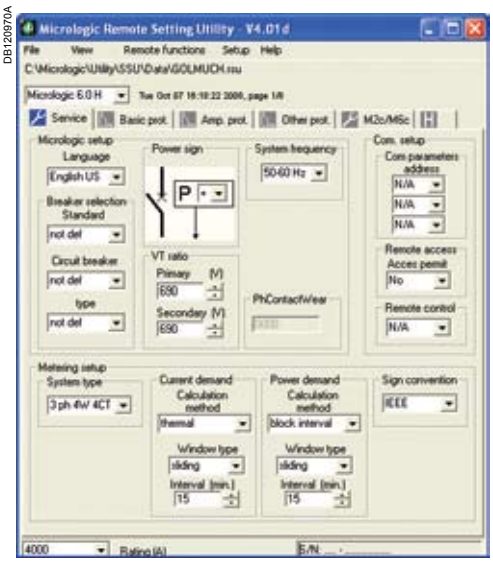

RSU configuration screen for a Micrologic.

Histories and maintenance indicators .....

The last ten trips and alarms are recorded in two separate history files that may be displayed on the screen:

- ■ tripping history:
  - □ type of fault
  - □ date and time
  - □ values measured at the time of tripping (interrupted current, etc.)
- ■ alarm history:
  - □ type of alarm
  - □ date and time
  - □ values measured at the time of the alarm.

All the other events are recorded in a third history file which is only accessible through the communication network.

- ■ Event log history (only accessible through the communication network)
  - □ modifications to settings and parameters
  - □ counter resets
  - □ system faults:
  - □ fallback position
  - □ thermal self-protection
  - □ loss of time
  - □ overrun of wear indicators
  - □ test-kit connections
  - □ etc.

Note:
All the events are time stampled: time-stamping is activated as soon as time is set manually or by a supervisor. No external power supply module is required (max. drift of 1 hour per year).

Maintenance indicators with COM option (BCM ULP)

A number of maintenance indicators may be called up on the screen to better plan for device maintenance:

- ■ contact wear
- ■ operation counter:
  - □ cumulative total
  - □ total since last reset.

Additional maintenance indicators are also available through the COM network, and can be used as an aid in troubleshooting:

- ■ highest current measured
- ■ number of test-kit connections
- ■ number of trips in operating mode and in test mode.

Additional technical characteristics

Safety
Measurement functions are independent of the protection functions.
The high-accuracy measurement module operates independently of the protection module.

Simplicity and multi-language
Navigation from one display to another is intuitive. The six buttons on the keypad provide access to the menus and easy selection of values. When the setting cover is closed, the keypad may no longer be used to access the protection settings, but still provides access to the displays for measurements, histories, indicators, etc.
Micrologic is also multi-language, including the following languages: English, Spanish, Portuguese, Russian, Chinese, French, German...

Intelligent measurement
Measurement-calculation mode:

- ■ energies are calculated on the basis of the instantaneous power values, in two manners:
  - □ the traditional mode where only positive (consumed) energies are considered
  - □ the signed mode where the positive (consumed) and negative (supplied) energies are considered separately
- ■ measurement functions implement the new “zero blind time” concept which consists in continuously measuring signals at a high sampling rate. The traditional “blind window” used to process samples no longer exists. This method ensures accurate energy calculations even for highly variable loads (welding machines, robots, etc.).

Always powered
All current-based protection functions require no auxiliary source. Voltage-based protection functions are connected to AC power via a voltage measurement input built into the circuit breaker.

Stored information
The fine setting adjustments, the last 100 events and the maintenance register remain in the control-unit memory even when power is lost.

Micrologic control units
Micrologic H “harmonics”

Micrologic H control units include all the functions offered by Micrologic P. Integrating significantly enhanced calculation and memory functions, the Micrologic H control unit offers in-depth analysis of power quality and detailed event diagnostics. It is intended for operation with a supervisor.

In addition to the Micrologic P functions, the Micrologic H control unit offers:
- ■ in-depth analysis of power quality including calculation of harmonics and the fundamentals
- ■ diagnostics aid and event analysis through waveform capture
- ■ enhanced alarm programming to analyse and track down a disturbance on the AC power system.

Measurements

The Micrologic H control unit offers all the measurements carried out by Micrologic P, with in addition:
- ■ phase by phase measurements of:
- □ power, energy
- □ power factors
- ■ calculation of:
- □ current and voltage total harmonic distortion (THD)
- □ current, voltage and power fundamentals
- □ current and voltage harmonics up to the 31st order.

Instantaneous values displayed on the screen

Currents					
I rms	A	1	2	3	N
	A	E-fault		E-leakage	
I max rms	A	1	2	3	N
	A	E-fault		E-leakage	
Voltages					
U rms	V	12	23	31	
V rms	V	1N	2N	3N	
U average rms	V	(U12 + U23 + U31) / 3			
U unbalance	%				
Power, energy					
P active, Q reactive, S apparent	W, Var, VA	Totals	1	2	3
E active, E reactive, E apparent	Wh, VARh, VAh	Totals consumed - supplied			
		Totals consumed			
		Totals supplied			
Power factor	PF	Total	1	2	3
Frequencies					
F	Hz				
Power-quality indicators					
Total fundamentals		U I P Q S			
THD	%	U I			
U and Iharmonics	Amplitude	3 5 7 9 11 13			

Harmonics 3, 5, 7, 9, 11 and 13, monitored by electrical utilities, are displayed on the screen.

Demand measurements
Similar to the Micrologic P control unit, the demand values are calculated over a fixed or sliding time window that may be set from 5 to 60 minutes.

Currents					
I demand	A	1	2	3	N
	A	E-fault		E-leakage	
I max demand	A	1	2	3	N
	A	E-fault		E-leakage	
Power					
P, Q, S demand	W, Var, VA	Totals			
P, Q, S max demand	W, Var, VA	Totals			

Maximeters
Only the current maximeters may be displayed on the screen.

Histories and maintenance indicators

These functions are identical to those of the Micrologic P.

Note: *Micrologic H control units come with a non-transparent lead-seal cover as standard.*

DB101521

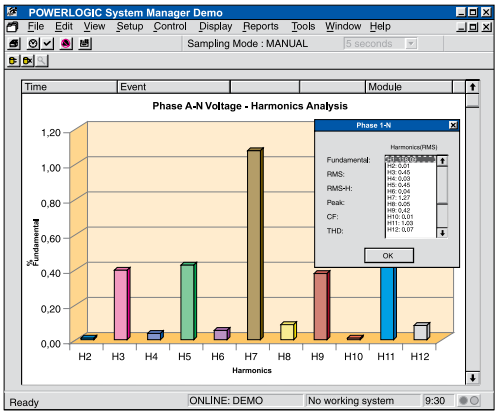

Display of harmonics up to 21th order.

DB120971A

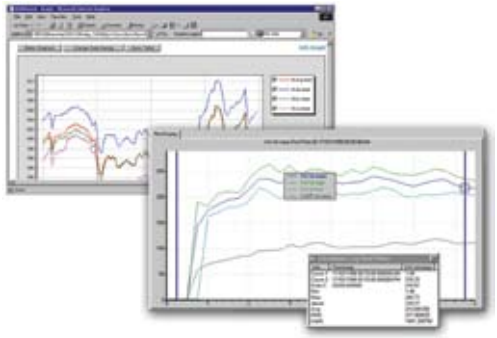

DB120969A

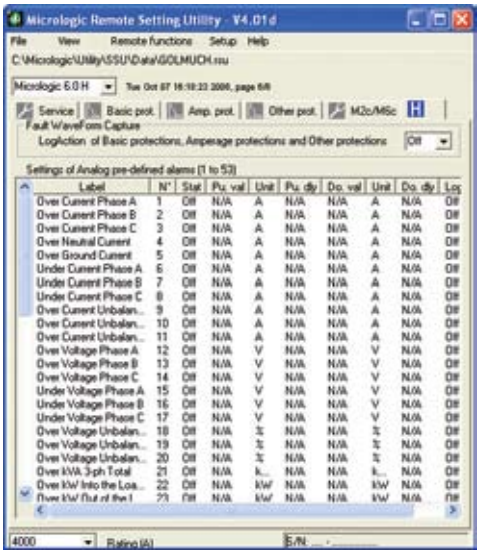

Log.

With the communication option

Additional measurements, maximeters and minimeters

Certain measured or calculated values are only accessible with the COM communication option:

- $I_{peak} / \sqrt{2}$ $(I_1 + I_2 + I_3)/3$, $I_{unbalance}$
- load level in % Ir
- power factor (total and per phase)
- voltage and current THD
- K factors of currents and average K factor
- crest factors of currents and voltages
- all the fundamentals per phase
- fundamental current and voltage phase displacement
- distortion power and distortion factor phase by phase
- amplitude and displacement of current and voltage harmonics 3 to 31.

The maximeters and minimeters are available only via the COM option (BCM ULP) for use with a supervisor.

Waveform capture

The Micrologic H control unit stores the last 4 cycles of each instantaneous current or voltage measurement. On request or automatically on programmed events, the control unit stores the waveforms. The waveforms may be displayed in the form of oscillograms by a supervisor via the COM option (BCM ULP). Definition is 64 points per cycle.

Pre-defined analogue alarms (1 to 53)

Each alarm can be compared to user-set high and low thresholds. Overrun of a threshold generates an alarm. An alarm or combinations of alarms can be linked to programmable action such as selective recording of measurements in a log, waveform capture, etc.

Event log and maintenance registers

The Micrologic H offers the same event log and maintenance register functions as the Micrologic P. In addition, it produces a log of the minimums and maximums for each “real-time” value.

Additional technical characteristics

Safety

Measurement functions are independent of the protection functions.
The high-accuracy measurement module operates independently of the protection module.

Simplicity and multi-language

Navigation from one display to another is intuitive. The six buttons on the keypad provide access to the menus and easy selection of values. When the setting cover is closed, the keypad may no longer be used to access the protection settings, but still provides access to the displays for measurements, histories, indicators, etc. Micrologic is also multi-language, including the following languages: English, Spanish, Portuguese, Russian, Chinese, French, German;;;

Intelligent measurement

Measurement-calculation mode:

- energies are calculated on the basis of the instantaneous power values, in two manners:
  - the traditional mode where only positive (consumed) energies are considered
  - the signed mode where the positive (consumed) and negative (supplied) energies are considered separately
- measurement functions implement the new “zero blind time” concept which consists in continuously measuring signals at a high sampling rate. The traditional “blind window” used to process samples no longer exists. This method ensures accurate energy calculations even for highly variable loads (welding machines, robots, etc.).

Always powered

All current-based protection functions require no auxiliary source. Voltage-based protection functions are connected to AC power via a voltage measurement input built into the circuit breaker.

Stored information

The fine setting adjustments, the last 100 events and the maintenance register remain in the control-unit memory even when power is lost.

Power Meter functions

Micrologic A/E/P/H control unit with COM option (BCM ULP)

In addition to protection functions, Micrologic A/E/P/H control units offer all the functions of Power Meter products as well as operating-assistance for the circuit breaker.

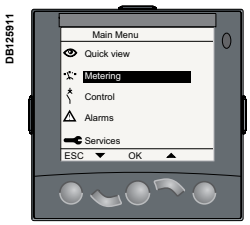

FDM121 display: navigation.

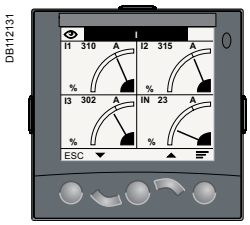

Current.

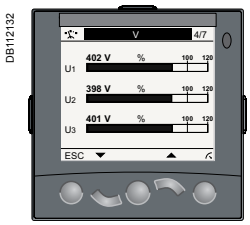

Voltage.

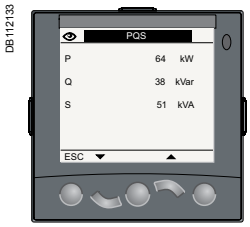

Power.

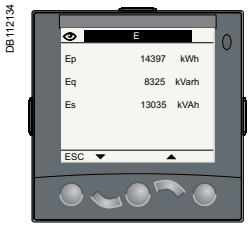

Consumption.

Examples of measurement screens on the FDM121 display unit.

Micrologic A/E/P/H measurement functions are made possible by Micrologic intelligence and the accuracy of the sensors. They are handled by a microprocessor that operates independent of protection functions.

Display

FDM121 display unit

The FDM121 switchboard display unit can be connected to a Micrologic COM option (BCM ULP) using a breaker ULP cord to display all measurements on a screen. The result is a veritable 96 x 96 mm Power Meter.
In addition to the information displayed on the Micrologic LCD, the FDM121 screen shows demand, power quality and maximeter/minimeter values along with histories and maintenance indicators.
The FMD121 display unit requires a 24 V DC power supply. The COM option (BCM ULP) unit is supplied by the same power supply via the breaker ULP cord connecting it to the FDM121.

Measurements

Instantaneous rms measurements

The Micrologic continuously display the RMS value of the highest current of the three phases and neutral (Imax). The navigation buttons can be used to scroll through the main measurements.
In the event of a fault trip, the trip cause is displayed.
The Micrologic A measures phase, neutral, ground fault currents.
The Micrologic E offers voltage, power, Power Factor, measurements in addition to the measurements provided by Micrologic A.
The Micrologic P/H offer frequency, cos.φ in addition to the measurements provided by Micrologic E.

Maximeters / minimeters

Every instantaneous measurement provided by Micrologic A or E can be associated with a maximeter/minimeter. The maximeters for the highest current of the 3 phases and neutral, the demand current and power can be reset via the FDM121 display unit or the communication system.

Energy metering

The Micrologic E/P/H also measures the energy consumed since the last reset of the meter. The active energy meter can be reset via Micrologic keypad or the FDM121 display unit or the communication system.

Demand and maximum demand values

Micrologic E/P/H also calculates demand current and power values. These calculations can be made using a block or sliding interval that can be set from 5 to 60 minutes in steps of 1 minute. The window can be synchronised with a signal sent via the communication system. Whatever the calculation method, the calculated values can be recovered on a PC via Modbus communication.
Ordinary spreadsheet software can be used to provide trend curves and forecasts based on this data. They will provide a basis for load shedding and reconnection operations used to adjust consumption to the subscribed power.

Power quality

Micrologic H calculates power quality indicators taking into account the presence of harmonics up to the 15th order, including the total harmonic distortion (THD) of current and voltage.

Micrologic A/E/P/H integrated Power Meter functions			Type		Display	
			A/E	P/H	Micrologic LCD	FDM121 display
Display of protection settings						
Pick-ups (A) and delays	All settings can be displayed	Ir, tr, Isd, tsd, Ii, Ig, tg	A/E	P/H	■	-
Measurements						
Instantaneous rms measurements						
Currents (A)	Phases and neutral	I1, I2, I3, IN	A/E	P/H	■	■
	Average of phases	Iavg = (I1 + I2 + I3) / 3	A/E	P/H	-	■
	Highest current of the 3 phases and neutral	Imax of I1, I2, I3, IN	A/E	P/H	■	■
	Ground fault (Micrologic 6)	% Ig (pick-up setting)	A/E	P/H	■	■
	Current unbalance between phases	% Iavg	- /E	P/H	-	■
Voltages (V)	Phase-to-phase	V12, V23, V31	- /E	P/H	■	■
	Phase-to-neutral	V1N, V2N, V3N	- /E	P/H	■	■
	Average of phase-to-phase voltages	Vavg = (V12 + V23 + V31) / 3	- /E	P/H	-	■
	Average of phase-to-neutral voltages	Vavg = (V1N + V2N + V3N) / 3	- /E	P/H	-	■
	Ph-Ph and Ph-N voltage unbalance	% Vavg and % Vavg	- /E	P/H	-	■
	Phase sequence	1-2-3, 1-3-2	- / -	P/H	■	■
Frequency (Hz)	Power system	f	- / -	P/H	■	■
Power	Active (kW)	P, total	- /E	P/H	■	■
		P, per phase	- /E	P/H	■ (2)	■
	Reactive (kVAR)	Q, total	- /E	P/H	■	■
		Q, per phase	- / -	P/H	■ (2)	■
	Apparent (kVA)	S, total	- /E	P/H	■	■
		S, per phase	- / -	P/H	■ (2)	■
	Power Factor	PF, total	- /E	P/H	■	■
		PF, per phase	- / -	P/H	■ (2)	■
	Cos.φ	Cos.φ, total	- / -	P/H	■ (2)	■
		Cos.φ, per phase	- / -	P/H	■ (2)	■
Maximeters / minimeters						
	Associated with instantaneous rms measurements	Reset via FDM121 display unit and Micrologic keypad	A/E	P/H	■	■
Energy metering						
Energy	Active (kW), reactive (kVARh), apparent (kVAh)	Total since last reset	- /E	P/H	■	■
Demand and maximum demand values						
Demand current (A)	Phases and neutral	Present value on the selected window	- /E	P/H	■	■
		Maximum demand since last reset	- /E	P/H	■ (2)	■
Demand power	Active (kWh), reactive (kVAR), apparent (kVA)	Present value on the selected window	- /E	P/H	■	■
		Maximum demand since last reset	- /E	P/H	■ (2)	■
Calculation window	Sliding, fixed or com-synchronised	Adjustable from 5 to 60 minutes in 1 minute steps (1)	- /E	P/H	-	-
Power quality						
Total harmonic distortion (%)	Of voltage with respect to rms value	THDU,THDV of the Ph-Ph and Ph-N voltage	- / -	H	■	■
	Of current with respect to rms value	THDI of the phase current	- / -	H	■	■

(1) Available via the communication system only.
(2) Available for Micrologic P/H only.

Additional technical characteristics

Measurement accuracy

Accuracies are those of the entire measurement system, including the sensors:

- *current: class 1 as per IEC 61557-12*
- *voltage: 0.5 %*
- *power and energy: Class 2 as per IEC 61557-12*
- *frequency: 0.1 %.*

Operating-assistance functions

Micrologic A/E/P/H control unit with COM option (BCM ULP)

Histories

- trip indications in clear text in a number of user-selectable languages
- time-stamping: date and time of trip.

Maintenance indicators

Micrologic control unit have indicators for, among others, the number of operating cycles, contact wear P/H, load profile and operating times (operating hours counter) of the Masterpact circuit breaker.
It is possible to assign an alarm to the operating cycle counter to plan maintenance.
The various indicators can be used together with the trip histories to analyse the level of stresses the device has been subjected to.

Management of installed devices

Each circuit breaker equipped with a COM option (BCM ULP) can be identified via the communication system:

- serial number
- firmware version
- hardware version
- device name assigned by the user.

This information together with the previously described indications provides a clear view of the installed devices.

Micrologic A/E/P/H operating assistance functions			Type		Display	
			A/E	P/H	Micrologic LCD	FDM121 display
Operating assistance						
Trip history						
Trips	Cause of tripping	Ir, Isd, Ii, Ig, IΔn	- /E	P/H	■	■
Maintenance indicators						
Counter	Mechanical cycles	Assignable to an alarm	A/E	P/H	-	■
	Electrical cycles	Assignable to an alarm	A/E	P/H	-	■
	Hours	Total operating time (hours) (1)	A/E	P/H	-	-
Indicator	Contact wear	%	- / -	P/H	-	■
Load profile	Hours at different load levels	% of hours in four current ranges: 0-49 % In, 50-79 % In, 80-89 % In and ⩾ 90 % In	A /E	P/H	-	■

(1) Also available via the communication system.

Additional technical characteristics

Contact wear

Each time Masterpact opens, the Micrologic P/H trip unit measures the interrupted current and increments the contact-wear indicator as a function of the interrupted current, according to test results stored in memory. Breaking under normal load conditions results in a very slight increment. The indicator value may be read on the FDM121 display. It provides an estimation of contact wear calculated on the basis of the cumulative forces affecting the circuit breaker. When the indicator reaches 100 %, it is advised to inspect the circuit breaker to ensure the availability of the protected equipment.

Circuit breaker load profile

Micrologic A/E/P/H calculates the load profile of the circuit breaker protecting a load circuit. The profile indicates the percentage of the total operating time at four current levels (% of breaker In):

- *0 to 49 % In*
- *50 to 79 % In*
- *80 to 89 % In*
- *⩾ 90 % In.*

This information can be used to optimise use of the protected equipment or to plan ahead for extensions.

Switchboard-display functions

Micrologic A/E/P/H control unit with COM option (BCM ULP)

Micrologic measurement capabilities come into full play with the FDM121 switchboard display. It connects to COM option (BCM ULP) via a breaker ULP cord and displays Micrologic information. The result is a true integrated unit combining a circuit breaker and a Power Meter. Additional operating assistance functions can also be displayed.

PB103582

FDM121 display.

PB103807-32

Surface mount accessory.

PB103581-31

Connection with FDM121 display unit.

FDM121 switchboard display

The FDM121 switchboard display unit can be connected to a Micrologic COM option (BCM ULP). It uses the sensors and processing capacity of the Micrologic control unit. It is easy to use and requires no special software or settings. It is immediately operational when connected to the COM option (BCM ULP) by a breaker ULP cord. The FDM121 is a large display, but requires very little depth. The anti-glare graphic screen is backlit for very easy reading even under poor ambient lighting and at sharp angles.

Display of Micrologic measurements and trips

The FDM121 is intended to display Micrologic A/E/P/H measurements, trips and operating information. It cannot be used to modify the protection settings.
Measurements may be easily accessed via a menu.
Trips are automatically displayed.
■ A pop-up window displays the time-stamped description of the trip and the orange LED flashes

Status indications

When the circuit breaker is equipped with the COM option (BCM ULP) (including its set of sensors) the FDM121 display can also be used to view circuit breaker status conditions:
■ O/F: ON/OFF
■ SDE: Fault-trip indication (overload, short-circuit, ground fault).
■ PF: ready to close
■ CH: charged (spring loaded).

Remote control

When the circuit breaker is equipped with the COM option (BCM ULP) (including its kit for connection to XF and MX1 communication voltage releases), the FDM121 display can also be used to control (open/close) the circuit breaker. Two operating mode are available.
■ local mode : open/close commands are enabled from FDM121 while disable from communication network
■ remote mode : open/close commands are disabled from FDM121 while, enabled from communication network.

Main characteristics

■ 96 x 96 x 30 mm screen requiring 10 mm behind the door (or 20 mm when the 24 volt power supply connector is used).
■ White backlighting.
■ Wide viewing angle: vertical ±60°, horizontal ±30°.
■ High resolution: excellent reading of graphic symbols.
■ Alarm LED: flashing orange for alarm pick-up, steady orange after operator reset if alarm condition persists.
■ Operating temperature range -10 °C to +55 °C.
■ CE / UL / CSA marking (pending).
■ 24 V DC power supply, with tolerances 24 V -20 % (19.2 V) to 24 V +10 % (26.4 V).
When the FDM121 is connected to the communication network, the 24 V DC can be supplied by the communication system wiring system (see paragraph "Connection").
■ Consumption 40 mA.

Mounting

The FDM121 is easily installed in a switchboard.
■ Standard door cut-out 92 x 92 mm.
■ Attached using clips.
To avoid a cut-out in the door, an accessory is available for surface mounting by drilling only two 22 mm diameter holes.
The FDM121 degree of protection is IP54 in front. IP54 is maintained after switchboard mounting by using the supplied gasket during installation.

Connection

The FDM121 is equipped with:
■ a 24 V DC terminal block:
□ plug-in type with 2 wire inputs per point for easy daisy-chaining
□ power supply range of 24 V DC -20 % (19.2 V) to 24 V DC +10 % (26.4 V).
A 24 V DC type auxiliary power supply must be connected to a single point on the ULP system. The FDM121 display unit has a 2-point screw connector on the rear panel of the module for this purpose. The ULP module to which the auxiliary power supply is connected distributes the supply via the ULP cable to all the ULP modules connected to the system and therefore also to Micrologic.
■ two RJ45 jacks.
The Micrologic connects to the internal communication terminal block on the Masterpact via the breaker ULP cord. Connection to one of the RJ45 connectors on the FDM121 automatically establishes communication between the Micrologic and the FDM121 and supplies power to the Micrologic measurement functions.
When the second connector is not used, it must be fitted with a line terminator.

Switchboard-display functions

Micrologic A/E/P/H control unit with COM option (BCM ULP)

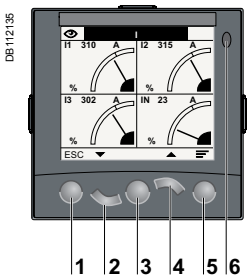

1 *Escape*
2 *Down*
3 *OK*
4 *Up*
5 *Context*
6 *Alarm LED*

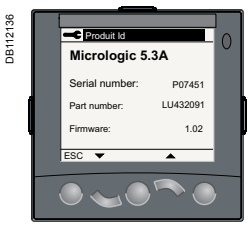

Product identification.

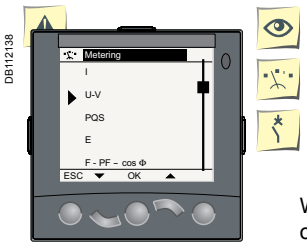

Metering: sub-menu.

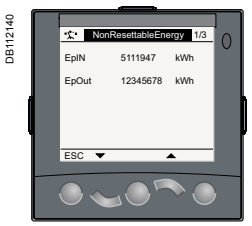

Metering: meter.

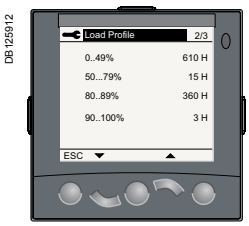

Services.

Navigation

Five buttons are used for intuitive and fast navigation. The “Context” button may be used to select the type of display (digital, bargraph, analogue).
The user can select the display language (Chinese, English, French, German, Italian, Portuguese, Spanish, etc.).

Screens

Main menu

When powered up, the FDM121 screen automatically displays the ON/OFF status of the device.

Quick view
Metering
Control

Alarms
Services.

When not in use, the screen is not backlit. Backlighting can be activated by pressing one of the buttons. It goes off after 3 minutes.

Fast access to essential information

■ “Quick view” provides access to five screens that display a summary of essential operating information (I, U, f, P, E, THD, circuit breaker On / Off).

Access to detailed information

■ "Metering" can be used to display the measurement data (I, U-V, f, P, Q, S, E, THD, PF) with the corresponding min/max values.
■ Alarms displays the trip history.
■ Services provides access to the operation counters, energy and maximeter reset function, maintenance indicators, identification of modules connected to the internal bus and FDM121 internal settings (language, contrast, etc.)

Communication components and FDM121 connections

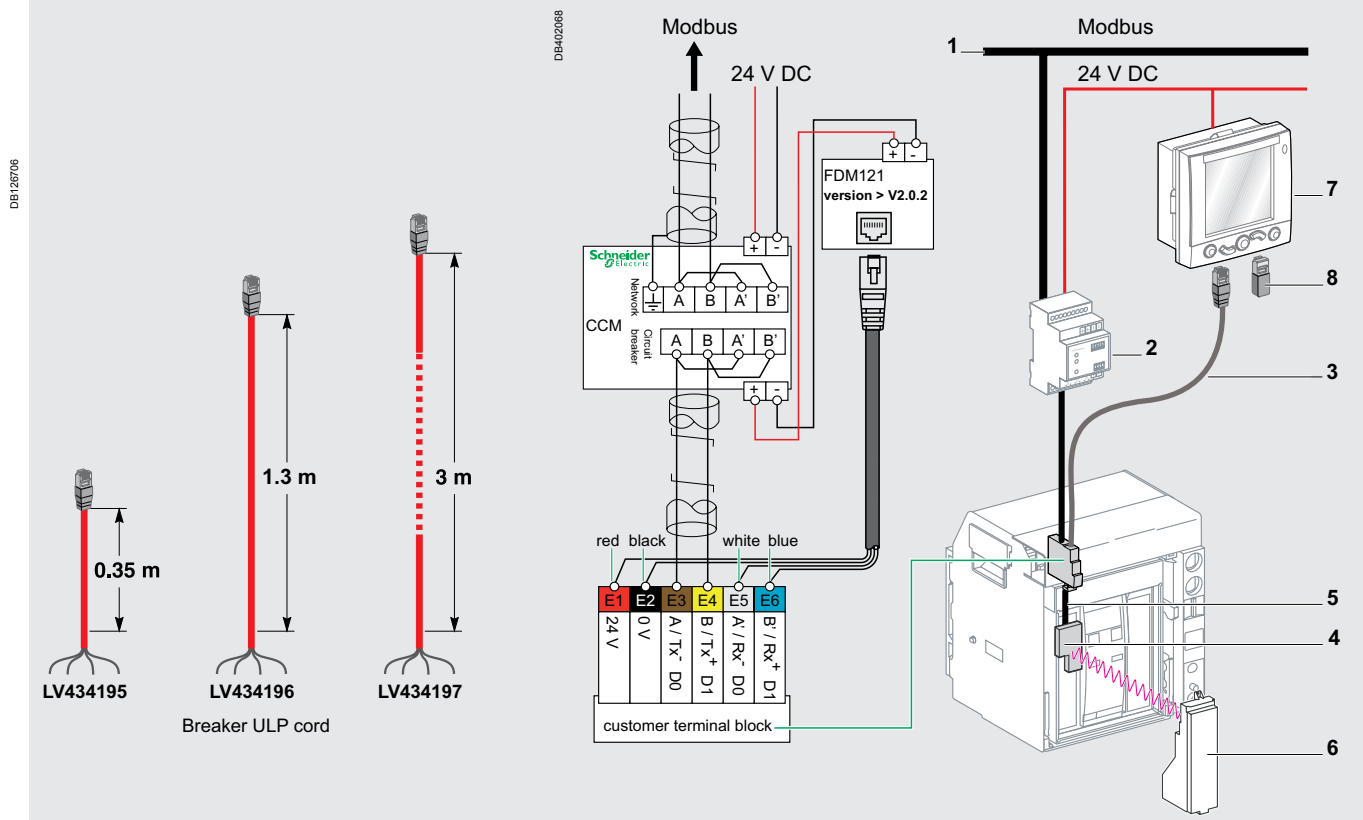

Connections

■ *Masterpact is connected to the FDM121 display unit via the breaker ULP cord.*
□ *cord available in three lengths: 0.35 m, 1.3 m and 3 m.*
□ *lengths up to 10 m possible using extensions.*

1 *Modbus network*
2 *CCM (chassis module)*
3 *Breaker ULP cord*
4 *"device" communication module (BCM ULP)*
5 *Prefabricated wiring*
6 *Micrologic trip unit*
7 *FDM121 display*
8 *Line terminator*

DB101524

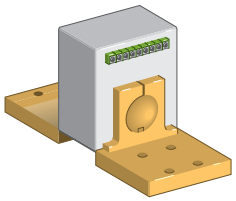

External sensor (CT).

PB100834-48

Rectangular sensor.

06133779A

External sensor for source ground return protection.

External sensors

External sensor for earth-fault and neutral protection
The sensors, used with the 3P circuit breakers, are installed on the neutral conductor for:
- neutral protection (with Micrologic P and H)
- residual type earth-fault protection (with Micrologic A, E, P and H).

The rating of the sensor (CT) must be compatible with the rating of the circuit breaker:
- NT06 to NT16: TC 400/1600
- NW08 to NW20: TC 400/2000
- NW25 to NW40: TC 1000/4000
- NW40b to NW63: TC 4000/6300.

For oversized neutral protection the sensor rating must be compatible with the measurement range: 1.6 x IN (available up to NW 40 and NT 16).

Rectangular sensor for earth-leakage protection
The sensor is installed around the busbars (phases + neutral) to detect the zero-phase sequence current required for the earth-leakage protection. Rectangular sensors are available in two sizes.
Inside dimensions (mm)
- 280 x 115 up to 1600 A for Masterpact NT and NW
- 470 x 160 up to 3200 A for Masterpact NW.

External sensor for source ground return protection
The sensor is installed around the connection of the transformer neutral point to earth and connects to the Micrologic 6.0 control unit via an MDGF module to provide the source ground return (SGR) protection.

Voltage measurement inputs
Voltage measurement inputs are required for power measurements (Micrologic P or H) and for earth-leakage protection (Micrologic 7...).
As standard, the control unit is supplied by internal voltage measurement inputs placed downstream of the pole for voltages between 220 and 690 V AC. On request, it is possible to replace the internal voltage measurement inputs by an external voltage input (PTE option) which enables the control unit to draw power directly from the distribution system upstream of the circuit breaker. An 3 m cable with ferrite comes with this PTE option.

PB100773-32

Long time rating plug.

Long-time rating plug

Four interchangeable plugs may be used to limit the long-time threshold setting range for higher accuracy.
The time delay settings indicated on the plugs are for an overload of 6 Ir (for further details, see the characteristics on page A-13 and page A-15).

As standard, control units are equipped with the 0.4 to 1 plug.

Setting ranges										
Standard	Ir = In x…	0.4	0.5	0.6	0.7	0.8	0.9	0.95	0.98	1
Low-setting option	Ir = In x…	0.4	0.45	0.50	0.55	0.60	0.65	0.70	0.75	0.8
High-setting option	Ir = In x…	0.80	0.82	0.85	0.88	0.90	0.92	0.95	0.98	1
Off plug		No long-time protection (Ir = In for Isd setting)								

Important: *long-time rating plugs must always be removed before carrying out insulation or dielectric withstand tests.*

PB101026-32A

External 24 V DC power supply module.

External 24 V DC power-supply module

The external power-supply module makes it possible to use the display even if the circuit breaker is open or not supplied (for the exact conditions of use, see the "electrical diagrams" part of this catalogue).
This module powers both the control unit (100 mA) and the M2C and M6C programmable contacts (100 mA).
If the COM communication option is used, the communication bus requires 24 V DC power supply. With the Micrologic A/E control unit, this module makes it possible to display currents of less than 20 % of In.
With the Micrologic P and H, it can be used to display fault currents after tripping.

Characteristics
- power supply:
  - 110/130, 200/240, 380/415 V AC (+10 % -15 %)
  - 24/30, 48/60, 100/125 V DC (+20 % -20 %)
- output voltage: 24 V DC ±5 %, 1 A.
- ripple < 1 %
- dielectric withstand : 3.5 kV rms between input/output, for 1 minute
- overvoltage category: as per IEC 60947-1 cat. 4.

Micrologic control units
Accessories and test equipment

PB100771-24

Battery module

Battery module
The battery module maintains display operation and communication with the supervisor if the power supply to the Micrologic control unit is interrupted. It is installed in series between the Micrologic control unit and the AD module.

Characteristics
- battery run-time: 4 hours (approximately)
- mounted on vertical backplate or symmetrical rail.

PB100774-32

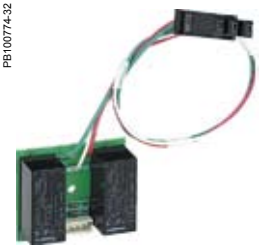

M2C.

PB100781-32

M6C.

M2C, M6C programmable contacts
These contacts are optional equipment for the Micrologic E, P and H control units. They are described with the indication contacts for the circuit breakers.

Micrologic			Type E	Types P, H
Characteristics			**M2C**	**M2C/M6C**
Minimum load			100 mA/24 V	100 mA/24 V
Breaking capacity (A) p.f.: 0.7	V AC	240	5	5
		380	3	3
	V DC	24	1.8	1.8
		48	1.5	1.5
		125	0.4	0.4
		250	0.15	0.15

M2C: 24 V DC power supplied by control unit (consumption 100 mA).
M6C: external 24 V DC power supply required (consumption 100 mA).

PB100775-32

Lead-seal cover.

Spare parts
Lead-seal covers
A lead-seal cover controls access to the adjustment dials.
When the cover is closed:
- it is impossible to modify settings using the keypad unless the settings lockout pin on the cover is removed
- the test connector remains accessible
- the test button for the earth-fault and earth-leakage protection function remains accessible.

Characteristics
- transparent cover for basic Micrologic and Micrologic A, E control units
- non-transparent cover for Micrologic P and H control units.

Spare battery
A battery supplies power to the LEDs identifying the tripping causes. Battery service life is approximately ten years.
A test button on the front of the control unit is used to check the battery condition.
The battery may be replaced on site when discharged.

PB100837-68

Portable test kit.

Test equipment

Hand-held test kit

The hand-held mini test kit may be used to:

■ check operation of the control unit and the tripping and pole-opening system by sending a signal simulating a short-circuit

■ supply power to the control units for settings via the keypad when the circuit-breaker is open (Micrologic P and H control units).

Power source: standard LR6-AA battery.

Full function test kit

The test kit can be used alone or with a supporting personal computer.

The test kit without PC may be used to check:

■ the mechanical operation of the circuit breaker

■ the electrical continuity of the connection between the circuit breaker and the control unit

■ operation of the control unit:

□ display of settings

□ automatic and manual tests on protection functions

□ test on the zone-selective interlocking (ZSI) function

□ inhibition of the earth-fault protection

□ inhibition of the thermal memory.

The test kit with PC offers in addition:

■ the test report (software available on request).

Portable data acquisition
Masterpact and GetnSet

GetnSet is a portable data acquisition and storage accessory that connects directly to the Micrologic control units of Masterpact circuit breakers to read important electrical installation operating data and Masterpact protection settings.
This information is stored in the GetnSet internal memory and can be transferred to a PC via USB or Bluetooth for monitoring and analysis.

Overview of Masterpact GetnSet functions

GetnSet[(1)] is a portable data acquisition and storage device that works like a USB drive, letting users manually transfer data to and from a Masterpact circuit breaker or PC.
GetnSet can download operating data from Masterpact and download or upload settings.
Downloadable operating data include measurements, the last 3 trip history records and contact wear status.
Accessible settings include protection thresholds, external relay assignment modes and pre-defined alarm configurations if applicable.

PB104017

DB117616

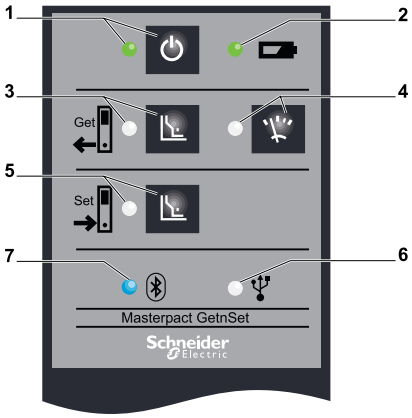

1 On/Off
2 batterie indicator
3 Download settings
4 Download operating parameters
5 Upload settings
6 USB indicator
7 Bluetooth indicator

DB117440

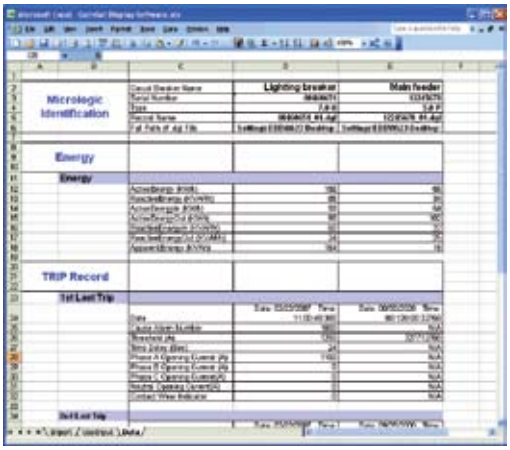

Operating data functions

Electrical installation information such as energy measurements and contact wear status is increasingly important to help reduce operating expenses and increase the availability of electrical power. Such data is often available from devices within the installation, but needs to be gathered and aggregated to allow analysis and determine effective improvement actions.
With GetnSet, this operating data can be easily read and stored as .dgl files in the internal memory. It can then be transferred to a PC via a USB or Bluetooth link and imported in an Excel spreadsheet.
The provided Excel spreadsheet can be used to display the operating data from several breakers in order to:
- analyse changes in parameters such as energy, power factor and contact wear
- compare the values of parameters between circuit breakers
- create graphics and reports using standard Excel tools

GetnSet data accessible in the Excel spreadsheet

Type of data	Micrologic		
Current	A/E	P	H
Energy, voltages, frequency, power, power factor	E	P	H
Power quality: fundamental, harmonics	-	-	H
Trip history	E	P	H
Contact wear	-	P	H

DB117441

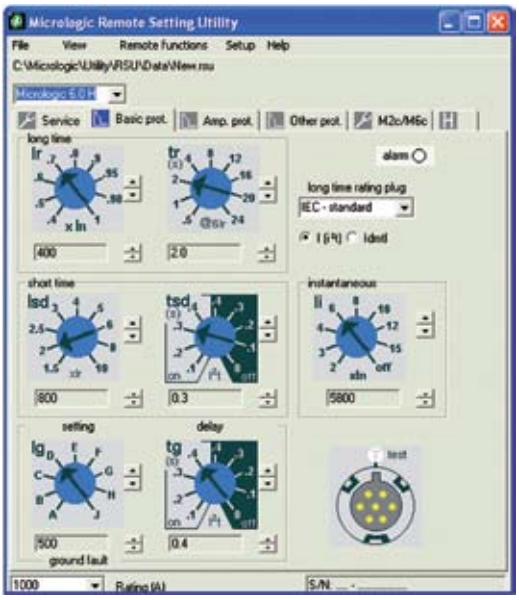

Protection setting functions

GetnSet can also be used to back up circuit breaker settings and restore them on the same device or, under certain conditions, copy them to any Masterpact circuit breaker equipped with the same type of Micrologic control unit. This concerns only advanced settings, as other parameters must be set manually using the dials on the Micrologic control unit.

■ When commissioning the installation, safeguard the configuration parameters of your electrical distribution system by creating a back-up of circuit breaker settings so that they can be restored at any time.

■ The settings read by GetnSet can be transferred to a PC and are compatible with RSU software (Remote Setting Utility). Protection configurations can also be created on a PC using this software, copied to GetnSet's internal memory and uploaded to a Masterpact circuit breaker with a compatible Micrologic trip unit and dial settings.

Operating procedure

The procedure includes several steps.

■ Plug GetnSet into the receptacle on the front of the Micrologic control unit of a Masterpact circuit breaker.

■ On the keypad, select the type of data (operating data or settings) and the transfer direction (download or upload). This operation can be done as many times as required for the entire set of Masterpact circuit breakers.

■ Downloaded data is transferred to the GetnSet internal memory and a file is created for each Masterpact device (either an .rsu file for settings or a.dgl file for operating data).

■ Data can be transferred between GetnSet and a PC via a USB or Bluetooth connection.

■ Operating data can be imported in an Excel spreadsheet and protection settings can be read with RSU (remote setting utility) software.

Features

■ Battery-powered to power a Micrologic control unit even if the breaker has been opened or tripped. This battery provides power for an average of 1 hour of use, enough for more than 100 download operations.

■ Can be used on Masterpact circuit breakers equipped or not equipped with a Modbus "device" communication module.

■ Portable, standalone accessory eliminating the need for a PC to connect to a Masterpact circuit breaker.

■ No driver or software required for GetnSet connection to a PC.

■ Can be used with many circuit breakers, one after the other.

■ Embedded memory sized to hold data from more than 5000 circuit breakers.

■ Supplied with its battery, a cable for connection to Micrologic trip units, a USB cable for connection to a PC and a battery charger.

Compatibility

■ Micrologic control units A, E, P, H

■ PC with USB port or Bluetooth link and Excel software

Technical characteristics

Charger power supply	100 – 240 V; ∼1A; 50 – 60 Hz
Charger power consumption	Max 100 W
Battery	3.3 V DC; 9mAh; Li-Ion
Operating temperature	-20 to +60 °C
GetnSet dimensions	95 x 60 x 35 mm

Communication
COM option in Masterpact

All the Masterpact devices can be fitted with the communication function thanks to the COM option. Masterpact uses the Modbus communications protocol for full compatibility with the supervision management systems. An external gateway is available for communication on other networks:
Eco COM is limited to the transmission of metering data.
It is not used to communicate status and controls.

For fixed devices, the COM option is made up of:
■ a Modbus BCM ULP "device" communication module, installed behind the Micrologic control unit and supplied with its set of sensors (OF, SDE ,PF and CH micro switches) its kit for connection to XF and MX1 communicating voltage releases and its COM terminal block (inputs E1 to E6).
For drawout devices, the COM option is made up of:
■ a Modbus BCM ULP "device" communication module, installed behind the Micrologic control unit and supplied with its set of sensors (OF, SDE, PF and CH micro switches) its kit for connection to XF and MX1 communicating voltage releases and its COM terminal block (inputs E1 to E6).
■ a "chassis" communication module supplied separately with its set of sensors (CE, CD and CT contacts) Modbus CCM.
Status indication by the COM option is independent of the device indication contacts. These contacts remain available for conventional uses.

Modbus BCM ULP "Device" communication module
This module is independent of the control unit. It receives and transmits information on the communication network. An infra-red link transmits data between the control unit and the communication module.
Consumption: 30 mA, 24 V.

Modbus CCM "chassis" communication module
This module is independent of the control unit. With Modbus "chassis" communication module, this module makes it possible to address the chassis and to maintain the address when the circuit breaker is in the disconnected position.
Consumption: 30 mA, 24 V.

XF and MX1 communicating voltage releases
The XF and MX1 communicating voltage releases are equipped for connection to the "device" communication module.
The remote-tripping function (MX2 or MN) are independent of the communication option. They are not equipped for connection to the "device" communication module.

PB106674-20

Modbus BCM ULP "device" communication module.

PB100802B-27

Modbus CCM "chassis" communication module.

DB402049

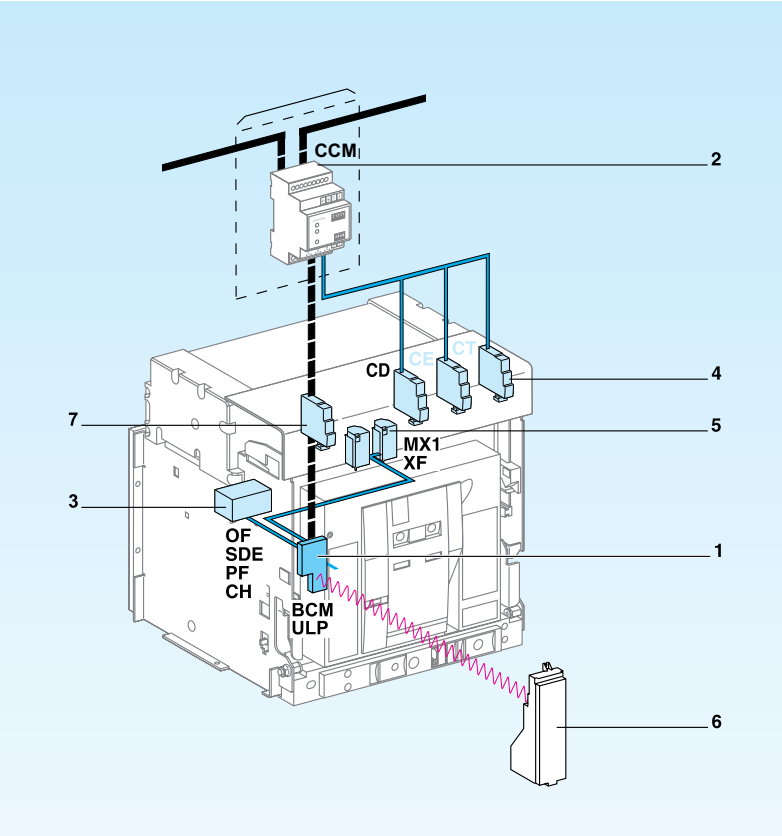

1 Modbus BCM ULP "Device" communication module.
2 Modbus CCM "Chassis" communication module (option).
3 OF, SDE, PF and CH micro switches.
4 CE, CD and CT contacts.
5 XF and MX1 communicating voltage releases.
6 Micrologic control unit.
7 COM terminal block (E1 to E6).

: Hard wire.
: Modbus.

PB104804

A: Micrologic with ammeter
E: Micrologic "Energy"
P: Micrologic "Power"
H: Micrologic "Harmonics"

***Note:** see the description of the Micrologic control units for further details on protection and alarms, measurements, waveform capture, histories, logs and maintenance indicators.*

Four functional levels
The Masterpact can be integrated into a Modbus communication environment. There are four possible functional levels that can be combined.

	Switch-disconnectors	Circuit breaker			
Status indications					
ON/OFF (O/F)	■	A	E	P	H
Spring charged CH	■	A	E	P	H
Ready to close	■	A	E	P	H
Fault-trip SDE	■	A	E	P	H
Connected / disconnected / test position CE/CD/CT (CCM only)	■	A	E	P	H
Controls					
MX1 open	■	A	E	P	H
XF close	■	A	E	P	H
Measurements					
Instantaneous measurement information	■	A	E	P	H
Averaged measurement information	■		E	P	H
Maximeter / minimeter	■	A	E	P	H
Energy metering	■		E	P	H
Demand for current and power	■		E	P	H
Power quality	■				H
Operating assistance					
Protection and alarm settings				P	H
Histories			E	P	H
Time stamped event tables				P	H
Maintenance indicators		A	E	P	H

Communication Modbus bus

The Modbus RS 485 (RTU protocol) system is an open bus on which communicating Modbus devices (Compact NS with Modbus COM, Power Meter PM700, PM800, Sepam, Vigilohm, Compact NSX, etc.) are installed. All types of PLCs and microcomputers may be connected to the bus.

Addresses
The Modbus communication parameters (address, baud rate, parity) are entered using the keypad on the Micrologic A, E, P, H. For a switch-disconnector, it is necessary to use the RSU (Remote Setting Utility) Micrologic utility.

Modbus addresses		
@xx	Circuit breaker manager	(1 to 47)
@xx + 50	Chassis manager	(51 to 97)
@xx + 200	Measurement manager	(201 to 247)
@xx + 100	Protection manager	(101 to 147)

The manager addresses are automatically derived from the circuit breaker address @xx entered via the Micrologic control unit (the default address is 47).

Number of devices
The maximum number of devices that may be connected to the Modbus bus depends on the type of device (Compact with Modbus COM, PM700, PM800, Sepam, Vigilohm, Compact NSX, etc.), the baud rate (19200 is recommended), the volume of data exchanged and the desired response time. The RS 485 physical layer offers up to 32 connection points on the bus (1 master, 31 slaves).
A fixed device requires only one connection point (communication module on the device). A drawout device uses two connection points (communication modules on the device and on the chassis).
The number must never exceed 31 fixed devices or 15 drawout devices.

Length of bus
The maximum recommended length for the Modbus bus is 1200 meters.

Bus power source
A 24 V DC power supply is required (less than 20 % ripple, insulation class II).

Masterpact communication
Networks and sofware

Masterpact uses the Modbus communication protocol, compatible with ION-E electrical engineering expert system software.
Two downloadable sofware (RSU, RCU) from schneider-electric.com facilitate implementation of communication functions.

Modbus

Modbus is the most widely used communication protocol in industrial networks.
It operates in master-slave mode. The devices (slaves) communicate one after the other with a gateway (master).
Masterpact, Compact NSX, PowerLogic and Sepam products all operate with this protocol. A Modbus network is generally implemented on an LV or MV switchboard scale. Depending on the data monitored and the desired refresh rate, a Modbus network connected to a gateway can serve 4 to 16 devices. For larger installations, a number of Modbus networks can be connected to an Ethernet network (TCP/IP/Modbus protocol) via their gateways (EGX).

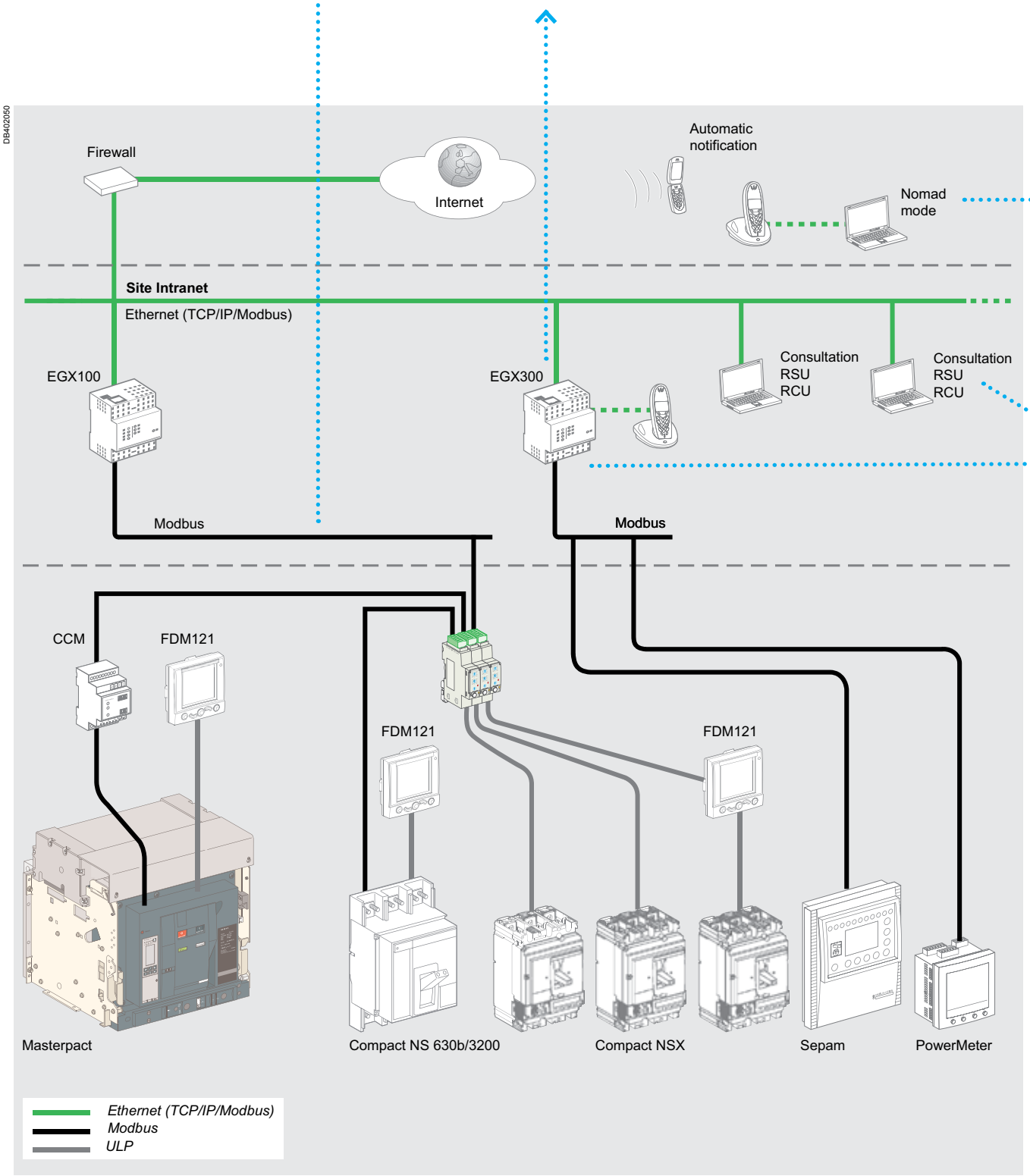

Micrologic utilities

■ Two utilities, RSU and RCU, presented on the next page, are available to assist in starting up a communicating installation. Intended for Masterpact, the software can be downloaded from the Schneider Electric internet site.

■ The "Live update" function enables immediate updating to obtain the most recent upgrades. These easy-to-use utilities include starting assistance and on-line help. They are compatible with Microsoft Windows 2000, XP and Windows 7.

PB104805

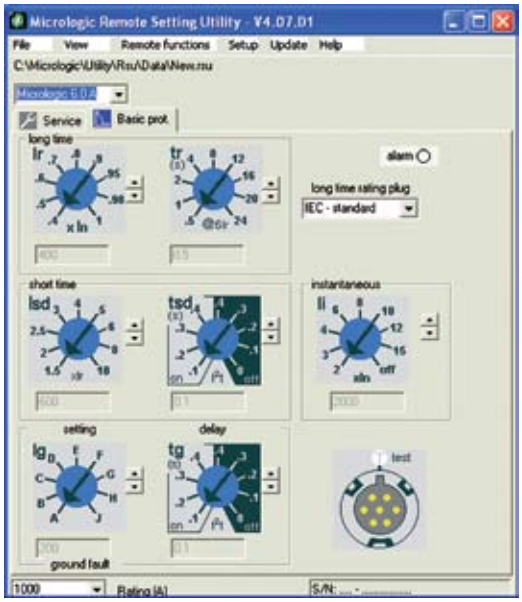

RSU configuration screen for a Micrologic.

DB112214

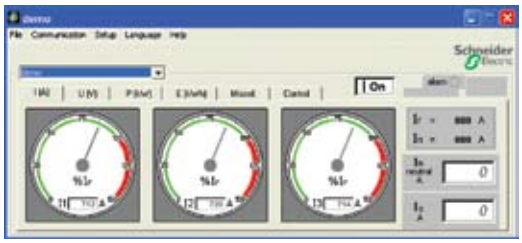

RCU mini-supervision screen for current measurements.

Gateway

The gateway has two functions:

■ access to the company intranet (Ethernet) by converting Modbus frames to the TCP/IP/Modbus protocol

■ optional web-page server for the information from the devices.

Examples include EGX300 and EGX100.

PE86181r-25

EGX300.

Masterpact communication
RSU and RCU utilities

Two utilities, RSU and RCU, are available to assist in starting up a communicating installation.
They can be downloaded from the Schneider Electric internet site and include a "Live update" function that enables immediate updating.

PB104805

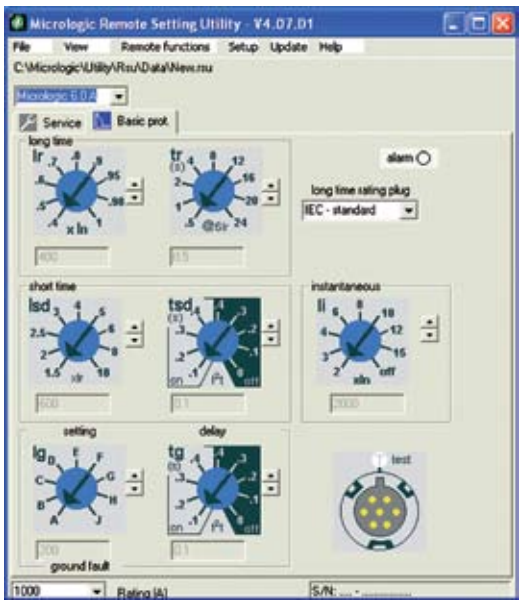

PB104806

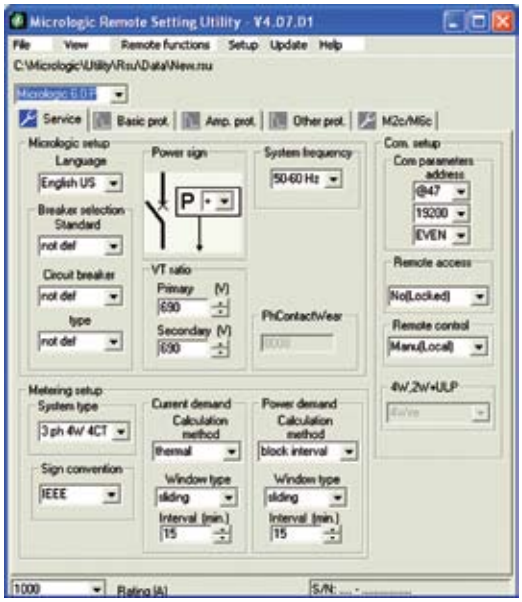

RSU: Micrologic Remote Setting Utility.

DB118723

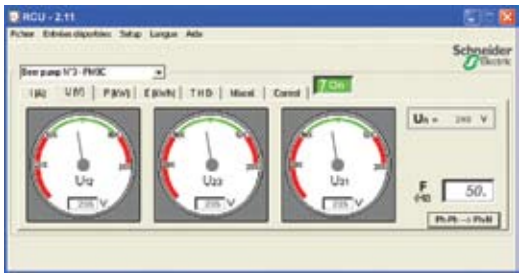

RCU: Remote Control Utility for communication tests.

RSU (Remote Setting Utility)

This utility is used to set the protection functions and alarms for each Masterpact and Compact NSX device.
After connection to the network and entry of the circuit-breaker Modbus address, the software automatically detects the type of trip unit installed.
There are two possible operating modes.

Off-line with the software disconnected from the communication network

For each selected circuit breaker, the user can do the following.

Determine the protection settings
The settings are carried out on a screen that shows the front of the trip unit. The Micrologic setting dials, keypad and screen are simulated for easy use of all Micrologic setting functions.

Save and duplicate the protection settings
Each configuration created can be saved for subsequent device programming. It can also be duplicated and used as the basis for programming another circuit breaker.

On-line with the software connected to the network

Similarly, for each selected circuit breaker, the user can do the following.

Display the current settings
The software displays the trip unit and provides access to all settings.

View the corresponding protection curves
A graphic curve module in the software displays the protection curve corresponding to the settings. It is possible to lay a second curve over the first for discrimination studies.

Modify settings in a secure manner
■ There are different levels of security:
□ password: by default, it is the same for all devices, but can be differentiated for each device
□ locking of the Modbus interface module which must be unlocked before the corresponding device can be set remotely
□ maximum settings limited by the positions of the two dials on the trip unit.
These dials, set by the user, determine the maximum settings that can be made via the communication system.
■ Settings are modified by:
□ either direct, on-line setting of the protection settings on the screen
□ or by loading the settings prepared in off-line mode. This is possible only if the positions of the dials allow the new settings.
All manual settings made subsequently on the device have priority.

Program alarms
■ Up to 12 alarms can be linked to measurements or events.
■ two alarms are predefined and activated automatically:
□ Micrologic 5: overload (Ir)
□ Micrologic 6: overload (Ir) and ground fault (Ig)
■ thresholds, priorities and time delays can be set for 10 other alarms. They may be selected from a list of 91 alarms

Set the outputs of the SDx relays
This is required when the user wants to change the standard configuration and assign different signals to the 2 outputs of the SDx relay.

RCU (Remote Control Utility)

The RCU utility can be used to test communication for all the devices connected to the Modbus network. It is designed for use with Masterpact, Compact NSX, Advantys OTB and Power Meter devices. It offers a number of functions.

Mini supervisor
■ Display of I, U, f, P, E and THD measurements for each device, via navigation.
■ Display of ON/OFF status.

Open and close commands for each device
A common or individual password must first be entered.

When all functions have been tested, this utility is replaced by the supervision software selected for the installation.

Schneider Electric electrical installation supervision, management and expert system software integrates Masterpact, Compact and Compact NSX identification modules.

Types of software

Masterpact, Compact and Compact NSX communication functions are designed to interface with software dedicated to electrical installations:
- switchboard supervision
- electrical installation supervision
- power system management: electrical engineering expert systems
- process control
- SCADA (Supervisory Control & Data Acquisition), EMS (Enterprise Management System) or BMS (Building Management System) type software.

Schneider Electric solutions

PE86181-25

EGX300

Electrical switchboard supervision via EGX300 Web servers

A simple solution for customers who want to consult the main electrical parameters of switchboard devices without dedicated software.
Up to 16 switchboard devices are connected via Modbus interfaces to an EGX300 Ethernet gateway integrating the functions of a web page server. The embedded Web pages can be easily configured with just a few mouse clicks. The information they provide is updated in real time.
The Web pages can be consulted using a standard Web browser on a PC connected via Ethernet to the company Intranet or remotely via a modem. Automatic notification of alarms and threshold overruns is possible via e-mail or SMS (Short Message Service).

PB104859

iRIO RTU

Electrical installation supervision via iRIO RTU

The iRIO RTU(remote terminal unit) can be used as Ethernet coupler for the PowerLogic System devices and for any other communicating devices operating under Modbus RS485 protocol. Data is viewable via a standard web browser.

PB104807_68

ION-E

ION-E electrical engineering expert system software

ION-E is a family of web-enabled software products for high-end power-monitoring applications. It is designed for large power systems.
ION-E offer detailed analysis of electrical events, long-duration data logging and extensive, economical report-building capabilities (e.g. consumption monitoring and tariff management).
A wide variety of screens can be displayed in real time, including more than 50 tables, analogue meters, bargraphs, alarms logs with links to display waveforms and predefined reports on energy quality and service costs.

Other software

Masterpact, Compact and Compact NSX devices can forward their measurement and operating information to special software integrating the electrical installation and other technical facilities:
- SCADA process control software: Vijeo CITECT
- BMS Building Management System software: Vista.

Please consult us.

Masterpact communication
Communication wiring system

Wiring system UPP
The wiring system is designed for low-voltage power switchboards. Installation requires no tools or special skills.
The prefabricated wiring ensures both data transmission (ModBus protocol) and 24 V DC power distribution for the communications modules on the Micrologic control units.

PB106672-176

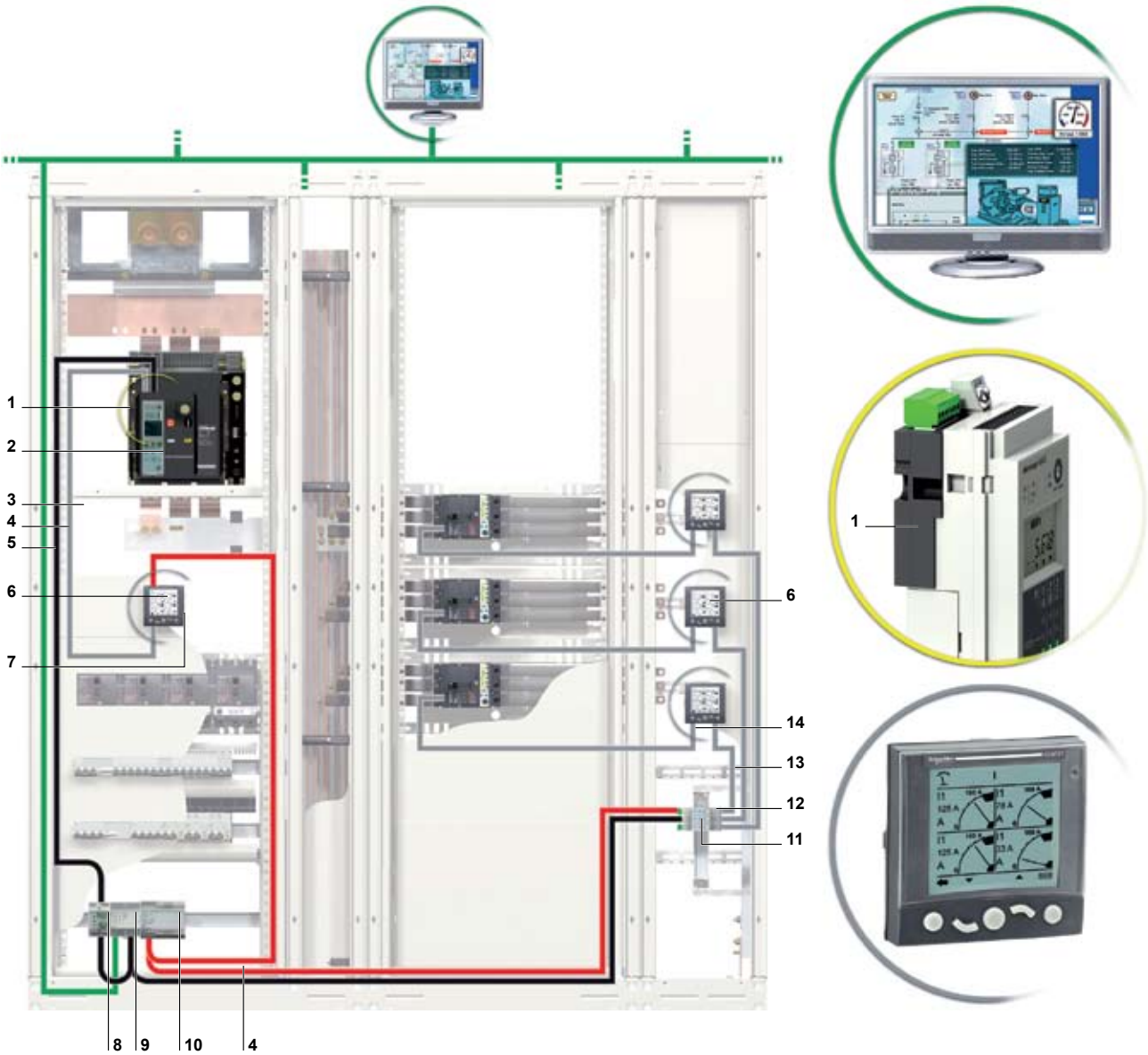

1	BCM ULP: Breaker Communication Module with ULP port		
2	Micrologic control unit		
3	Breaker ULP cord	0.35 m	LV434195
		1.3 m	LV434196
		3 m	LV434197
4	Modbus cable		
5	Ethernet cable		
6	FDM121: Front Display Module		TRV00121
7	ULP line terminators		TRV00880
8	CCM: Chassis Communication Module		33852
9	EGX100: Ethernet gateway		
10	External 24 V DC power supply module		
11	Modbus interface		TRV00210
12	Stacking accessorie		TRV00217
13	ULP cable	0.3 m	TRV00803
		0.6 m	TRV00806
		1 m	TRV00810
		2 m	TRV00820
		3 m	TRV00830
		5 m	TRV00850
14	NSX cord	0.35 m	LV434200
		1.3 m	LV434201
		3 m	LV434202

Connections
Overview of solutions

Three types of connection are available:
- vertical or horizontal rear connection
- front connection
- mixed connection.

The solutions presented are similar in principle for all Masterpact NT and NW fixed and drawout devices.

Rear connection

Horizontal

PB104354A40

Vertical

PB104355A40

Simply turn a horizontal rear connector 90° to make it a vertical connector.
For the 6300 A circuit breaker, only vertical connection is available.

Front connection

PB104356A40

Front connection is available for NW fixed and drawout versions up to 3200 A.

Mixed connection

PB104357A40

PB104358A40

PB104359A40

Note: *Masterpact circuit breakers can be connected indifferently with bare-copper, tinned-copper and tinned-aluminium conductors, requiring no particular treatment.*

Connections
Accessories

Type of accessory	Masterpact NT06 to NT16				Masterpact NW08 to NW63			
	Fixed		Drawout		Fixed		Drawout	
	Front connection	Rear connection	Front connection	Rear connection	Front connection	Rear connection	Front connection	Rear connection
Vertical connection adapters	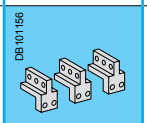		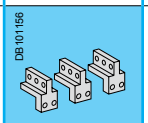					
Cable lug adapters	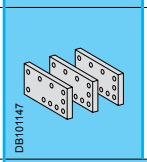		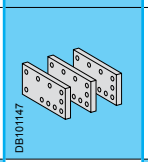					
Interphase barriers	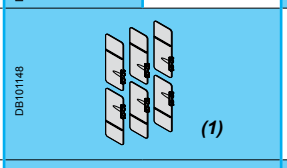 (1)			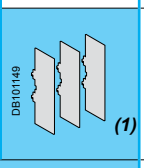 (1)		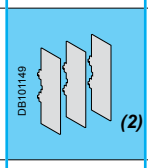 (2)		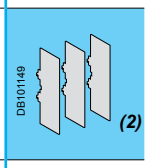 (2)
Spreaders	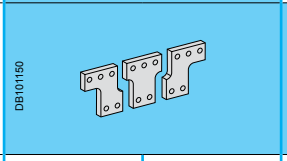		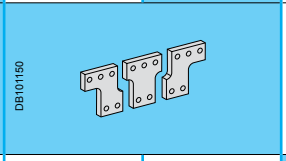					
Disconnectable front-connection adapter					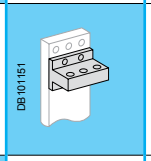			
Safety shutters with padlocking			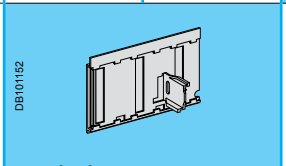 *standard*				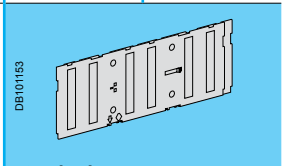 *standard*	
Shutter position indication and locking							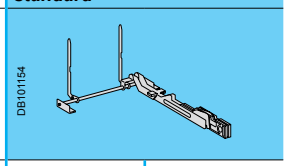	
Arc chute screen	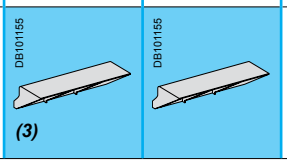 (3)							

(1) Mandatory for voltages > 500 V, not compatible with spreaders.
(2) Except for an NW40 equipped for horizontal rear connection, and for fixed NW40b-NW63.
(3) Mandatory for fixed NT front-connection versions with vertical-connection adapters oriented towards the front.

Masterpact M replacement kit

A set of connection parts is available to allow replacement of a Masterpact M08 to M32 circuit breaker by a Masterpact NW without modifying the busbars (please consult us).

Mounting on a switchboard backplate using special brackets

Masterpact NT and NW fixed front-connected circuit breakers can be installed on a backplate without any additional accessories.
Masterpact NW circuit breakers require a set of special brackets.

PB104360A30

Vertical-connection adapters (option)

Mounted on front-connected devices or chassis, the adapters facilitate connection to a set of vertical busbars.

PB104361A30

Cable-lug adapters (option)

Cable-lug adapters are used in conjunction with vertical-connection adapters.
They can be used to connect a number of cables fitted with lugs.
To ensure adequate mechanical strength, the connectors must be secured together via spacers (**catalogue number 07251**).

PB104350A30

Interphase barriers (option)

These barriers are flexible insulated partitions used to reinforce isolation of connection points in installations with busbars, whether insulated or not.
For Masterpact NT/NW devices, they are installed vertically between rear connection terminals. They are mandatory for NT devices at voltages > 500 V.
They are not compatible with spreaders.

PB104362A30

Spreaders (option)

Mounted on the front or rear connectors, spreaders are used to increase the distance between bars in certain installation configurations.

DB117039

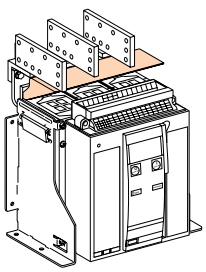

Arc chute screen (option)

For fixed Masterpact NT front-connection versions and with vertical-connection adapters oriented towards the front, an arc chute screen must be installed to respect safety clearances.

The arc chute screen is delivered in standard on the NT and NW drawout version.

Connections
Accessories

PB104363A350

Disconnectable front-connection adapter (option)
Mounted on a fixed front-connected device, the adapter simplifies replacement of a fixed device by enabling fast disconnection from the front.

PB104364A50

Safety shutters (VO standard)
Mounted on the chassis, the safety shutters automatically block access to the disconnecting contact cluster when the device is in the disconnected or test positions (degree of protection IP 20) When the device is removed from its chassis, no live parts are accessible.
The shutter-locking system is made up of a moving block that can be padlocked (padlock not supplied). The block:
- prevents connection of the device
- locks the shutters in the closed position.

For Masterpact NW08 to NW63
A support at the back of the chassis is used to store the blocks when they are not used:
- 2 blocks for NW08 to NW40
- 4 blocks for NW40b to NW63.

DB101158

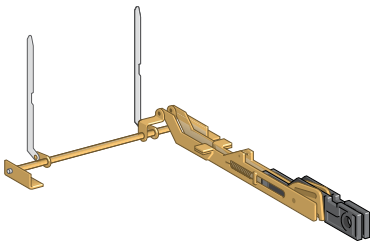

Shutter position indication and locking on front face (VIVC, NW only)
This option located on the chassis front plate indicates that the shutters are closed. It is possible to independently or separately padlock the two shutters using one to three padlocks (not supplied).

Locking
On the device

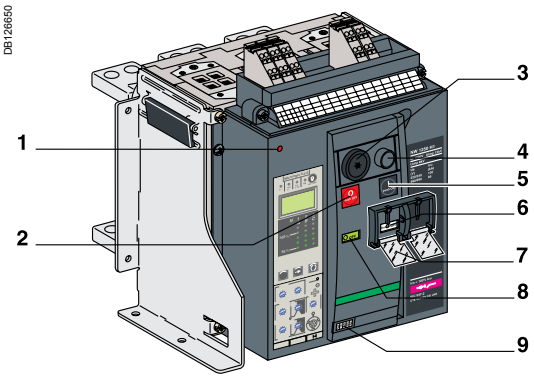

1 *Reset button for mechanical trip indication.*
2 *OFF pushbutton.*
3 *OFF position lock.*
4 *Electrical closing pushbutton.*
5 *ON pushbutton.*
6 *Springs charged indication.*
7 *Pushbutton locking.*
8 *Contact position indication.*
9 *Operation counter.*

PB100811-32

Access to pushbuttons protected by transparent cover.

PB100810-32

Pushbutton locking using a padlock.

PB100812-32

OFF position locking using a padlock.

PB104365A40

OFF position locking using a keylock.

Pushbutton locking VBP

The transparent cover blocks access to the pushbuttons used to open and close the device.
It is possible to independently lock the opening button and the closing button.
The locking device is often combined with a remote operating mechanism.
The pushbuttons may be locked using either:
- three padlocks (not supplied)
- lead seal
- two screws.

Device locking in the OFF position VCPO by padlocks, VSPO by keylocks

The circuit breaker is locked in the OFF position by physically maintaining the opening pushbutton pressed down:
- using padlocks (one to three padlocks, not supplied), shackle diameter: 5 to 8 mm
- using keylocks (one or two different keylocks, supplied).

Keys may be removed only when locking is effective (Profalux or Ronis type locks).
The keylocks are available in any of the following configurations:
- one keylock
- one keylock mounted on the device + one identical keylock supplied separately for interlocking with another device
- two different key locks for double locking.

Profalux and Ronis keylocks are compatible with each other.
A locking kit (without locks) is available for installation of one or two keylocks (Ronis, Profalux, Kirk or Castell).

Accessory-compatibility
For Masterpact NT: 3 padlocks or 1 keylock
For Masterpact NW: 3 padlocks and/or 2 keylocks

Cable-type door interlock IPA

This option prevents door opening when the circuit breaker is closed and prevents circuit breaker closing when the door is open.
For this, a special plate associated with a lock and a cable is mounted on the right side of the circuit breaker.
With this interlock installed, the source changeover function cannot be implemented.

Locking
On the chassis

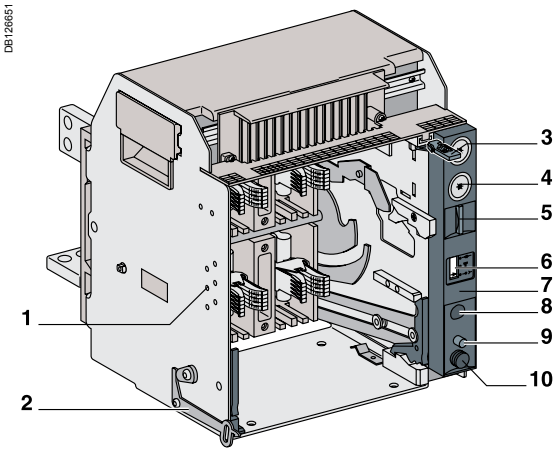

1 Mismatch protection.
2 Door interlock.
3 Racking interlock.
4 Keylock locking.
5 Padlock locking.
6 Position indicator.
7 Chassis front plate (accessible with cubicle door closed).
8 Racking-handle entry.
9 Reset button.
10 Racking-handle storage.

PB104366A32

"Disconnected" position locking by padlocks.

PB104367A34

"Disconnected" position locking by keylocks.

PB104352A32

Door interlock.

PB104368 A32

Racking interlock.

PB100815-32R_SE

Mismatch protection.

"Disconnected" position locking by padlocks (standard) or keylocks (VSPD option)

Mounted on the chassis and accessible with the door closed, these devices lock the circuit breaker in the "disconnected" position in two manners:
- using padlocks (standard), up to three padlocks (not supplied)
- using keylocks (optional), one or two different keylocks are available.

Profalux and Ronis keylocks are available in different options:
- one keylock
- two different keylocks for double locking
- one (or two) keylocks mounted on the device + one (or two) identical keylocks supplied separately for interlocking with another device.

A locking kit (without locks) is available for installation of one or two keylocks (Ronis, Profalux, Kirk or Castell).

"Connected", "disconnected" and "test" position locking

The "connected", "disconnected" and "test" positions are shown by an indicator andc are mechanically indexed. The exact position is obtained when the racking handle blocks. A release button is used to free it.
As standard, the circuit breaker can be locked only in "disconnected position". On request, the locking system may be modified to lock the circuit breaker in any of the three positions: "connected", "disconnected" or "test".

Door interlock catch VPEC

Mounted on the right or left-hand side of the chassis, this device inhibits opening of the cubicle door when the circuit breaker is in "connected" or "test" position. It the breaker is put in the "connected" position with the door open, the door may be closed without having to disconnect the circuit breaker.

Racking interlock VPOC

This device prevents insertion of the racking handle when the cubicle door is open.

Cable-type door interlock IPA

This option is identical for fixed and drawout versions.

Racking interlock between crank and OFF pushbutton IBPO (for NW only)

This option makes it necessary to press the OFF pushbutton in order to insert the racking handle and holds the device open until the handle is removed.

Automatic spring discharge before breaker removal DAE (for NW only)

This option discharges the springs before the breaker is removed from the chassis.

Mismatch protection VDC

Mismatch protection ensures that a circuit breaker is installed only in a chassis with compatible characteristics. It is made up of two parts (one on the chassis and one on the circuit breaker) offering twenty different combinations that the user may select.

Indication contacts

Indication contacts are available:
■ in the standard version for relay applications
■ in a low-level version for control of PLCs and electronic circuits.
M2C and M6C contacts may be programmed via the Micrologic E, P and H control units.

PB100806-32

ON/OFF indication contacts (OF) (micro switch type).

PB100807-20

ON/OFF indication contacts (OF) (rotary type).

PB100820-32

Additional "fault-trip" indication contacts (SDE).

PB100816-32

Combined contacts.

ON/OFF indication contacts OF

Two types of contacts indicate the ON or OFF position of the circuit breaker:
■ micro switch type changeover contacts for Masterpact NT
■ rotary type changeover contacts directly driven by the mechanism for Masterpact NW. These contacts trip when the minimum isolation distance between the main circuit-breaker contacts is reached.

OF				NT	NW
Supplied as standard				4	4
Maximum number				4	12
Breaking capacity (A) p.f.: 0.3 AC12/DC12	Standard			Minimum load: 100 mA/24 V	
		V AC	240/380	6	10/6 (1)
			480	6	10/6 (1)
			690	6	6
		V DC	24/48	2.5	10/6 (1)
			125	0.5	10/6 (1)
			250	0.3	3
	Low-level			Minimum load: 2 mA/15 V	
		V AC	24/48	5	6
			240	5	6
			380	5	3
		V DC	24/48	5/2.5	6
			125	0.5	6
			250	0.3	3

(1) Standard contacts: 10 A; optional contacts: 6 A.

"Fault-trip" indication contacts SDE

Circuit-breaker tripping due to a fault is signalled by:
■ a red mechanical fault indicator (reset)
■ one changeover contact SDE.
Following tripping, the mechanical indicator must be reset before the circuit breaker may be closed. One SDE is supplied as standard. An optimal SDE may be added. This latter is incompatible with the electrical reset after fault-trip option (RES).

SDE				NT/NW
Supplied as standard				1
Maximum number				2
Breaking capacity (A) p.f.: 0.3 AC12/DC12	Standard			Minimum load: 100 mA/24 V
		V AC	240/380	5
			480	5
			690	3
		V DC	24/48	3
			125	0.3
			250	0.15
	Low-level			Minimum load: 2 mA/15 V
		V AC	24/48	3
			240	3
			380	3
		V DC	24/48	3
			125	0.3
			250	0.15

Combined "connected/closed" contacts EF

The contact combines the "device connected" and the "device closed" information to produce the "circuit closed" information. Supplied as an option for Masterpact NW, it is mounted in place of the connector of an additional OF contact.

EF				NW
Maximum number				8
Breaking capacity (A) p.f.: 0.3 AC12/DC12	Standard			Minimum load: 100 mA/24 V
		V AC	240/380	6
			480	6
			690	6
		V DC	24/48	2.5
			125	0.8
			250	0.3
	Low-level			Minimum load: 2 mA/15 V
		V AC	24/48	5
			240	5
			380	5
		V DC	24/48	2.5
			125	0.8
			250	0.3

Indication contacts

PB100817-32

CE, CD and CT "connected/disconnected/test" position carriage switches.

PB100778-52

M2C programmable contacts: circuit-breaker internal relay with two contacts.

PB100781-32

M6C programmable contacts:
circuit-breaker external relay with six independent changeover contacts controlled from the circuit breaker via a three-wire connection. (maximum length is 10 meters).

"Connected", "disconnected" and "test" position carriage switches

Three series of optional auxiliary contacts are available for the chassis:
- changeover contacts to indicate the "connected" position CE
- changeover contacts to indicate the "disconnected" position CD. This position is indicated when the required clearance for isolation of the power and auxiliary circuits is reached
- changeover contacts to indicate the "test" position CT. In this position, the power circuits are disconnected and the auxiliary circuits are connected.

Additional actuators
A set of additional actuators may be installed on the chassis to change the functions of the carriage switches.

				NT	NW
Contacts				**CE/CD/CT**	**CE/CD/CT**
Maximum number	Standard			3 2 1	3 3 3
	with additional actuators				9 0 0
					6 3 0
					6 0 3
Breaking capacity (A)	Standard			Minimum load: 100 mA/24 V	
p.f.: 0.3		V AC	240	8	8
AC12/DC12			380	8	8
			480	8	8
			690	6	6
		V DC	24/48	2.5	2.5
			125	0.8	0.8
			250	0.3	0.3
	Low-level			Minimum load: 2 mA/15 V	
		V AC	24/48	5	5
			240	5	5
			380	5	5
		V DC	24/48	2.5	2.5
			125	0.8	0.8
			250	0.3	0.3

M2C / M6C programmable contacts

These contacts, used with the Micrologic E, P and H control units, may be programmed via the control unit keypad or via a supervisory station with the COM communication option. They require an external power supply module.
The M2C (two contacts) and M6C (six contacts) auxiliary contacts may be used to signal threshold overruns or status changes. They can be programmed using the keypad on the Micrologic P control unit or remotely using the COM option (BCM ULP).

Micrologic			**Type E**	**Types P, H**
Characteristics			**M2C**	**M2C/M6C**
Minimum load			100 mA/24 V	100 mA/24 V
Breaking capacity (A)	V AC	240	5	5
p.f.: 0.7		380	3	3
	V DC	24	1.8	1.8
		48	1.5	1.5
		125	0.4	0.4
		250	0.15	0.15

DB117038

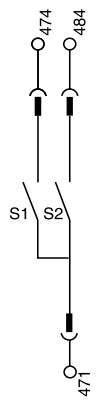

M2C: 24 V DC power supplied by control unit (consumption 100 mA).

M6C: external 24 V DC power supply required (consumption 100 mA).

DB101170

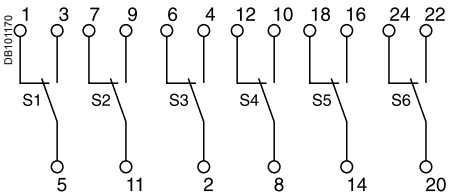

Two solutions are available for remote operation of Masterpact devices:
- a point-to-point solution
- a bus solution with the COM communication option.

PB104349A68

Note: *an opening order always takes priority over a closing order.*

If opening and closing orders occur simultaneously, the mechanism discharges without any movement of the main contacts. The circuit breaker remains in the open position (OFF).
In the event of maintained opening and closing orders, the standard mechanism provides an anti-pumping function by blocking the main contacts in open position.
Anti-pumping function. After fault tripping or intentional opening using the manual or electrical controls, the closing order must first be discontinued, then reactivated to close the circuit breaker.
When the automatic reset after fault trip (RAR) option is installed, to avoid pumping following a fault trip, the automatic control system must take into account the information supplied by the circuit breaker before issuing a new closing order or blocking the circuit breaker in the open position (information on the type of fault, e.g. overload, short-time fault, earth fault, earth leakage, short-circuit, etc.).

Note: *MX communicating releases are of the impulse type only and cannot be used to lock a circuit breaker in OFF position. For locking in OFF position, use the remote tripping function (2nd MX or MN).*
When MX or XF communicating releases are used, the third wire (C3, A3) must be connected even if the communication module is not installed. When the control voltage (C3-C1 or A3-A1) is applied to the MX or XF releases, it is necessary to wait 1.5 seconds before issuing an order. Consequently, it is advised to use standard MX or XF releases for applications such as source-changeover systems.

The remote ON / OFF function is used to remotely open and close the circuit breaker. It is made up of:
- an electric motor MCH equipped with a “springs charged” limit switch contact CH
- two voltage releases:
  - a closing release XF
  - an opening release MX.

Optionally, other functions may be added:
- a “ready to close” contact PF
- an electrical closing pushbutton BPFE
- remote RES following a fault.

A remote-operation function is generally combined with:
- device ON / OFF indication OF
- “fault-trip” indication SDE.

Wiring diagram of a point-to-point remote ON / OFF function

DB111783

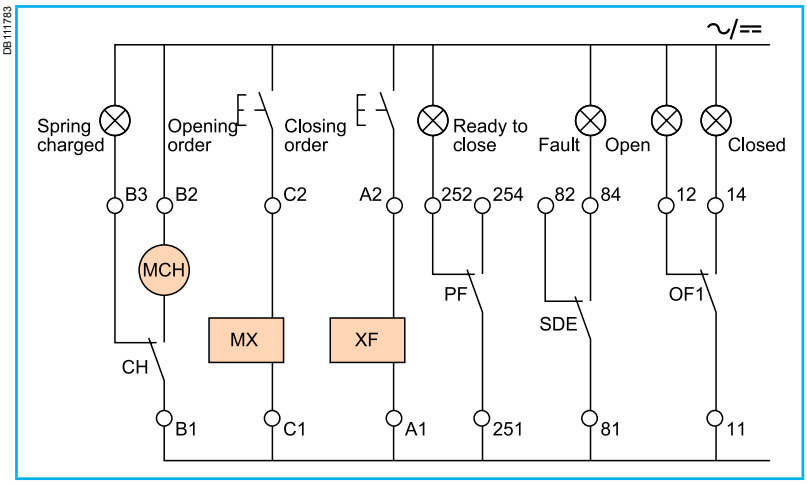

Wiring diagram of a bus-type remote ON / OFF function

DB402067

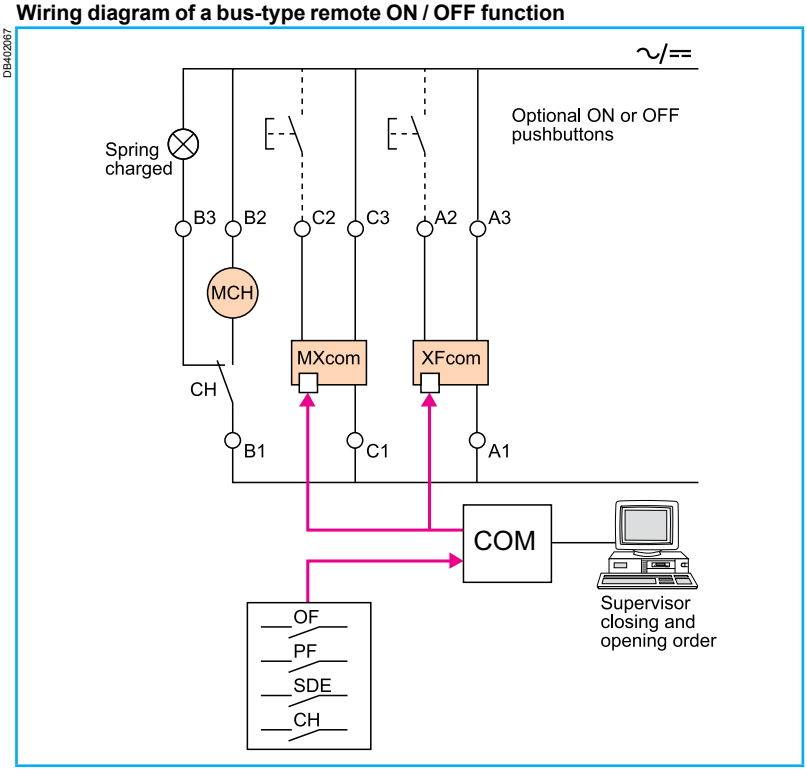

Remote operation
Remote ON / OFF

PB100797-23

Electric motor MCH for Masterpact NT.

PB100808-32

Electric motor MCH for Masterpact NW.

Electric motor MCH

The electric motor automatically charges and recharges the spring mechanism when the circuit breaker is closed. Instantaneous reclosing of the breaker is thus possible following opening. The spring-mechanism charging handle is used only as a backup if auxiliary power is absent.
The electric motor MCH is equipped as standard with a limit switch contact CH that signals the "charged" position of the mechanism (springs charged).

Characteristics		
Power supply	V AC 50/60 Hz	48/60 - 100/130 - 200/240 - 277- 380/415 - 400/440 - 480
	V DC	24/30 - 48/60 - 100/125 - 200/250
Operating threshold		0.85 to 1.1 Un
Consumption (VA or W)		180
Motor overcurrent		2 to 3 In for 0.1 s
Charging time		maximum 3 s for Masterpact NT maximum 4 s for Masterpact NW
Operating frequency		maximum 3 cycles per minute
CH contact		10 A at 240 V

DB117037

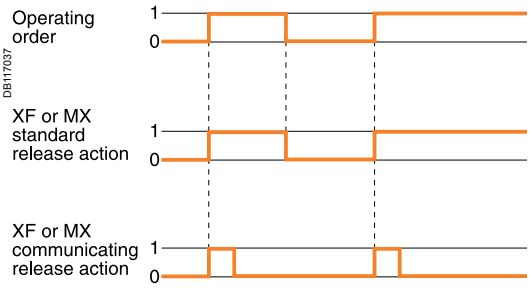

Voltage releases XF and MX

Their supply can be maintained or automatically disconnected.

Closing release XF

The XF release remotely closes the circuit breaker if the spring mechanism is charged.

Opening release MX

The MX release instantaneously opens the circuit breaker when energised. It locks the circuit breaker in OFF position if the order is maintained (except for MX "communicating" releases).

Note: *whether the operating order is maintened or automatically disconnected (pulse-type), XF or MX "communicating" releases ("bus" solution with "COM" communication option) always have an impulse-type action (see diagram).*

Characteristics		XF	MX
Power supply	V AC 50/60 Hz	24 - 48 - 100/130 - 200/250 - 277 - 380/480	
	V DC	12 - 24/30 - 48/60 - 100/130 - 200/250	
Operating threshold		0.85 to 1.1 Un	0.7 to 1.1 Un
Consumption (VA or W)		Hold: 4.5 Pick-up: 200 (200 ms)	Hold: 4.5 Pick-up: 200 (200 ms)
Circuit-breaker response time at Un		55 ms ±10 (Masterpact NT) 70 ms ±10 (NW ⩽ 4000 A) 80 ms ±10 (NW > 4000 A)	50 ms ±10

PB100809-16

XF and MX voltage releases.

"Ready to close" contact PF

The "ready to close" position of the circuit breaker is indicated by a mechanical indicator and a PF changeover contact. This signal indicates that all the following are valid:

- ■ the circuit breaker is in the OFF position
- ■ the spring mechanism is charged
- ■ a maintained opening order is not present:
  - □ MX energised
  - □ fault trip
  - □ remote tripping second MX or MN
  - □ device not completely racked in
  - □ device locked in OFF position
  - □ device interlocked with a second device.

PB100818-16

"Ready to close" contacts PF.

Characteristics				NT/NW
Maximum number				1
Breaking capacity (A) p.f.: 0.3 AC12/DC12	Standard			Minimum load: 100 mA/24 V
		V AC	240/380	5
			480	5
			690	3
		V DC	24/48	3
			125	0.3
			250	0.15
	Low-level			Minimum load: 2 mA/15 V
		V AC	24/48	3
			240	3
			380	3
		V DC	24/48	3
			125	0.3
			250	0.15

Electrical closing pushbutton BPFE.

Electrical closing pushbutton BPFE

Located on the front panel, this pushbutton carries out electrical closing of the circuit breaker. It is generally associated with the transparent cover that protects access to the closing pushbutton.
Electrical closing via the BPFE pushbutton takes into account all the safety functions that are part of the control/monitoring system of the installation.
The BPFE connects to the closing release (XF com) in place of the COM module.
The COM module is incompatible with this option.
Different types of voltage exist and the XF electromagnet is compulsary if the BPFE option is selected.

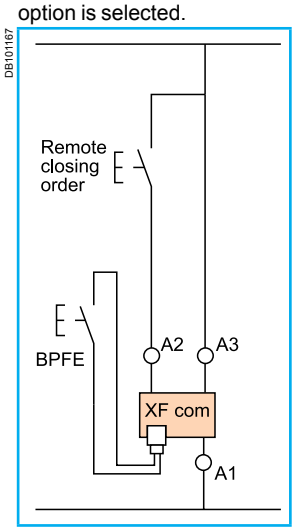

Remote reset after fault trip

Electrical reset after fault trip RES

Following tripping, this function resets the “fault trip” indication contacts SDE and the mechanical indicator and enables circuit breaker closing.
Power supply: 110 / 130 V AC and 200 / 240 V AC.
The use of XF closing release is compulsory with this option.
The additional "Fault Trip" indication contact SDE2 is not compatible with RES.

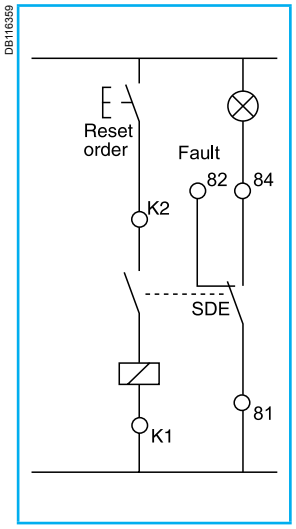

Automatic reset after fault trip RAR

Following tripping, a reset of the mechanical indicator (reset button) is no longer required to enable circuit-breaker closing. The mechanical (reset button) and electrical SDE indications remain in fault position until the reset button is pressed.
The use of XF closing release is compulsory with this option.

Remote operation
Remote tripping

PB104369A68

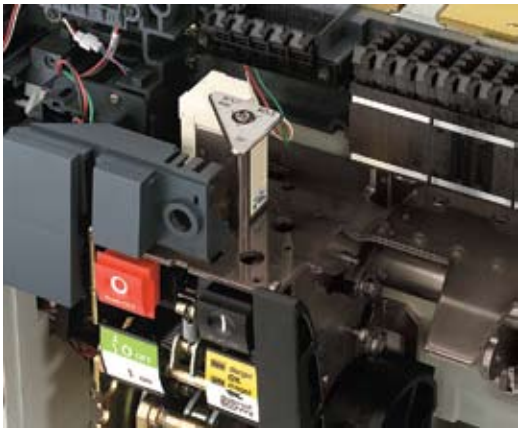

This function opens the circuit breaker via an electrical order. It is made up of:
- a shunt release second MX
- or an undervoltage release MN
- or a delayed undervoltage release MNR: MN + delay unit.

These releases (2nd MX or MN) cannot be operated by the communication bus.
The delay unit, installed outside the circuit breaker, may be disabled by an emergency OFF button to obtain instantaneous opening of the circuit breaker.

Wiring diagram for the remote-tripping function

DB101172 DB101175 DB117188

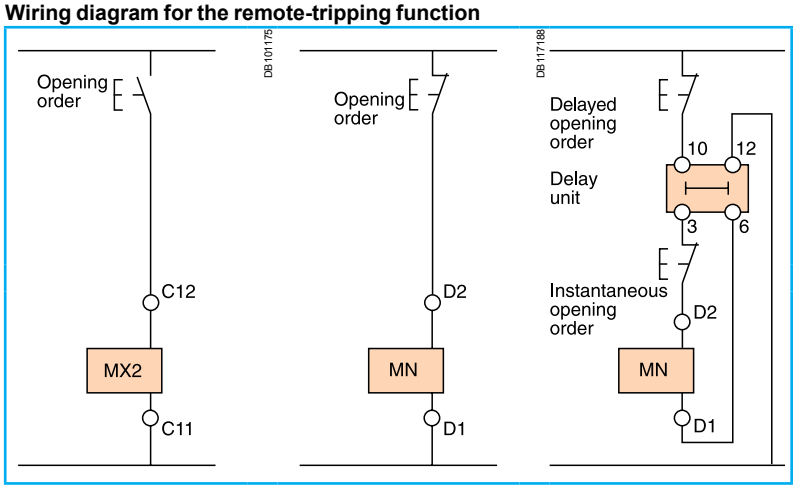

DB100809-16

MX or MN voltage release.

Voltage releases second MX

When energised, the MX voltage release instantaneously opens the circuit breaker. A continuous supply of power to the second MX locks the circuit breaker in the OFF position.

Characteristics			
Power supply	V AC 50/60Hz	24 - 48 - 100/130 - 200/250 - 277- 380/480	
	V DC	12 - 24/30 - 48/60 - 100/130 - 200/250	
Operating threshold		0.7 to 1.1 Un	
Permanent locking function		0.85 to 1.1 Un	
Consumption (VA or W)		Pick-up: 200 (80 ms)	Hold: 4.5
Circuit-breaker response time at Un		50 ms ±10	

Instantaneous voltage releases MN

The MN release instantaneously opens the circuit breaker when its supply voltage drops to a value between 35 % and 70 % of its rated voltage. If there is no supply on the release, it is impossible to close the circuit breaker, either manually or electrically. Any attempt to close the circuit breaker has no effect on the main contacts. Circuit-breaker closing is enabled again when the supply voltage of the release returns to 85 % of its rated value.

Characteristics			
Power supply	V AC 50/60 Hz V DC	24 - 48 - 100/130 - 200/250 - 380/480 24/30 - 48/60 - 100/130 - 200/250	
Operating threshold	Opening Closing	0.35 to 0.7 Un 0.85 Un	
Consumption (VA or W)		Pick-up: 200 (200 ms)	Hold: 4.5
MN consumption with delay unit (VA or W)		Pick-up: 200 (200 ms)	Hold: 4.5
Circuit-breaker response time at Un		40 ms ±5 for NT 90 ms ±5 for NW	

MN delay units

To eliminate circuit-breaker nuisance tripping during short voltage dips, operation of the MN release can be delayed. This function is achieved by adding an external delay unit in the MN voltage-release circuit. Two versions are available, adjustable and non-adjustable.

Characteristics			
Power supply	Non-adjustable	100/130 - 200/250	
V AC 50-60 Hz /DC	Adjustable	48/60 - 100/130 - 200/250 - 380/480	
Operating threshold	Opening	0.35 to 0.7 Un	
	Closing	0.85 Un	
Delay unit consumption	Pick-up: 200 (200 ms)		Hold: 4.5
Circuit-breaker response time at Un	Non-adjustable	0.25 s	
	Adjustable	0.5 s - 0.9 s - 1.5 s - 3 s	

PB104740

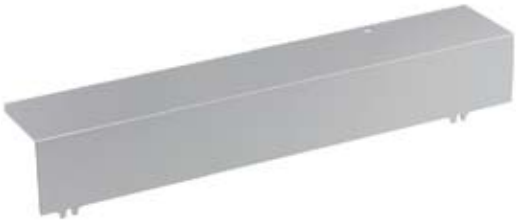

Auxiliary terminal shield CB

Optional equipment mounted on the chassis, the shield prevents access to the terminal block of the electrical auxiliaries.

PB104382A32

Operation counter CDM

The operation counter sums the number of operating cycles and is visible on the front panel. It is compatible with manual and electrical control functions.
This option is compulsory for all the source-changeover systems.

DB101173

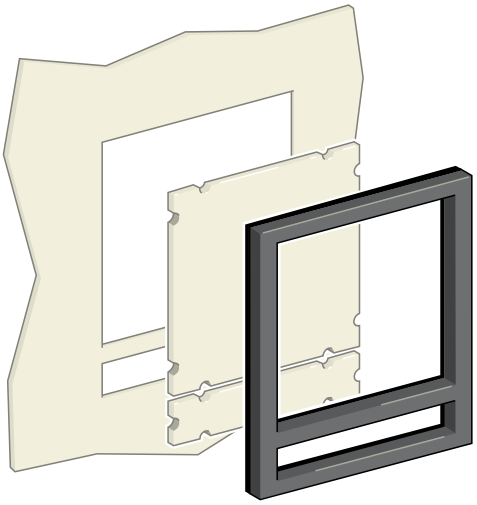

Escutcheon CDP with blanking plate.

Escutcheon CDP

Optional equipment mounted on the door of the cubicle, the escutcheon increases the degree of protection to IP 40 (circuit breaker installed free standing: IP30) .
It is available in fixed and drawout versions.

Blanking plate OP for escutcheon

Used with the escutcheon, this option closes off the door cut-out of a cubicle not yet equipped with a device. It may be used with the escutcheon for both fixed and drawout devices.

Transparent cover CCP for escutcheon

Optional equipment mounted on the escutcheon, the cover is hinged and secured by a screw. It increases the degree of protection to IP54, IK10. It adapts to drawout devices.

PB100776-42

Transparent cover CCP for escutcheon.

Source-changeover systems
Presentation

PB100843A

PB100844A

Commercial and service sector:
- *operating rooms in hospitals*
- *safety systems for tall buildings*
- *computer rooms (banks, insurance companies, etc.)*
- *lighting systems in shopping centres…*

PB100845A

Industry:
- *assembly lines*
- *engine rooms on ships*
- *critical auxiliaries in thermal power stations…*

PB100846A

PB100847A

Infrastructures:
- *port and railway installations*
- *runway lighting systems*
- *control systems on military sites…*

Manual source-changeover system
This is the most simple type. It is controlled manually by an operator and consequently the time required to switch from the normal to the replacement source can vary.
A manual source-changeover system is made up of two or three mechanically interlocked manually-operated circuit breakers or switch-disconnectors.
The interlocks prevent any paralleling, even transient, of the two sources.

Remote-operated source-changeover system
This is the most commonly employed system for devices with high ratings (above 400 A). No human intervention is required. Transfer from the normal to the replacement source is controlled electrically.
A remote-controlled source-changeover system is made up of two or three circuit breakers or switch-disconnectors linked by an electrical interlocking system that may have different configurations. In addition, a mechanical interlocking system protects against electrical malfunctions or incorrect manual operations.

Automatic source-changeover systems
An automatic controller may be added to a remote-operated source-changeover system for automatic source control according to programmable operating modes.
This solution ensures optimum energy management:
- transfer to a replacement source according to external requirements
- management of power sources
- regulation
- emergency source replacement, etc.

The automatic controller may be fitted with an option for communication with a supervisor.

Communication option
The communication option must not be used to control the opening or closing of source-changeover system circuit breakers. It should be used only to transmit measurement data or circuit-breaker status.
The eco COM option is perfectly suited to these equipments.

DB126268

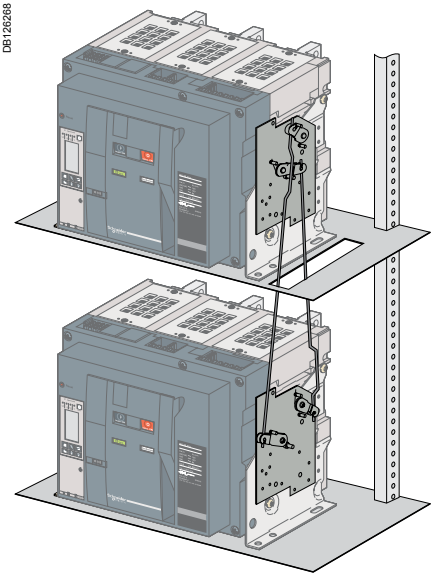

Interlocking of two Masterpact NT or NW circuit breakers using connecting rods.

Interlocking of two Compact NS630b to 1600 or two Masterpact NT and NW devices using connecting rods

The two devices must be mounted one above the other (either 2 fixed or 2 withdrawable/drawout devices).
Combinations are possible between Compact NS630b to NS1600 devices and between Masterpact NT and Masterpact NW devices.

Installation

This function requires:
- an adaptation fixture on the right side of each circuit breaker or switch-disconnector
- a set of connecting rods with no-slip adjustments.

The adaptation fixtures, connecting rods and circuit breakers or switch-disconnectors are supplied separately, ready for assembly by the customer.
The maximum vertical distance between the fixing planes is 900 mm.

Possible combinations of “Normal” and “Replacement” source circuit breakers

“Normal N”	“Replacement” R			
	NS630b to NS1600	**NT06 to NT16**	**NW08 to NW40**	**NW40b to NW63**
NS630b to NS1600				
Ratings 250... 1600 A	■			
NT06 to NT16				
Ratings 250... 1600 A		■	■	■
NW08 to NW40				
Ratings 320... 4000 A		■	■	■
NW40b to NW63				
Ratings 4000... 6300 A		■	■	■

Source-changeover systems
Mechanical interlocking

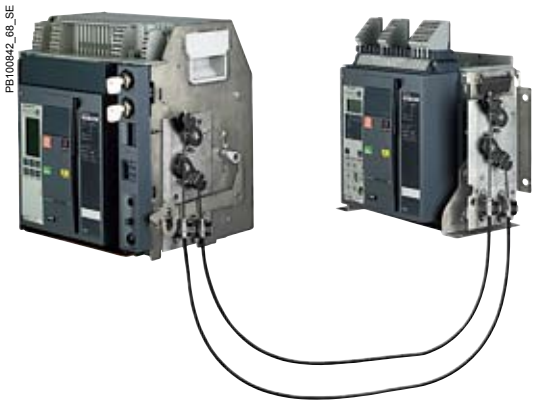

Interlocking of two Masterpact circuit breakers using cable.

Interlocking of two Masterpact NT/NW or up to three Masterpact NW devices using cables

For cable interlocking, the circuit breakers may be mounted one above the other or side-by-side.
The interlocked devices may be fixed or drawout, three-pole or four-pole, and have different ratings and sizes.

Interlocking between two devices (Masterpact NT and NW)
This function requires:
- an adaptation fixture on the right side of each device
- a set of cables with no-slip adjustments
- the use of a mechanical operation counter CDM is compulsory.

The maximum distance between the fixing planes (vertical or horizontal) is 2000 mm.

Interlocking between three devices (Masterpact NW only)
This function requires:
- a specific adaptation fixture for each type of interlocking, installed on the right side of each device
- two or three sets of cables with no-slip adjustments
- the use of a mechanical operation counter CDM is compulsory.

The maximum distance between the fixing planes (vertical or horizontal) is 1000 mm.

Installation
The adaptation fixtures, sets of cables and circuit breakers or switch-disconnectors are supplied separately, ready for assembly by the customer.

Installation conditions for cable interlocking systems:
- cable length: 2.5 m
- radius of curvature: 100 mm
- maximum number of curves: 3.

Possible combinations of “Normal” and “Replacement” source circuit breakers

“Normal N”	“Replacement” R		
	NT06 to NT16	NW08 to NW40	NW40b to NW63
NT06 to NT16			
Ratings 250... 1600 A	■	■	■
NW08 to NW40			
Ratings 320... 4000 A	■	■	■
NW40b to NW63			
Ratings 4000... 6300 A	■	■	■

All combinations of two Masterpact NT and Masterpact NW devices are possible, whatever the rating or size of the devices.

Possible combinations of three device

	NT06 to NT16	NW08 to NW40	NW40b to NW63
NT06 to NT16			
Ratings 250... 1600 A			
NW08 to NW40			
Ratings 320... 4000 A		■	■
NW40b to NW63			
Ratings 4000... 6300 A		■	■

Only Masterpact NW may be used for three-device combinations.

Types of mechanical interlocking and combinations

See catalogue “Source changeover systems”, réf. LVPED208007EN.

Electrical interlocking

Electrical interlocking is used with the mechanical interlocking system.
An automatic controller may be added to take into account information from the distribution system.

Moreover, the relays controlling the “normal” and “replacement” circuit breakers must be mechanically and/or electrically interlocked to prevent them from giving simultaneous closing commands.

Electrical interlocking is carried out by an electrical control device.
For Masterpact, this function can be implemented in one of two ways:
■ using the IVE unit
■ by an electrician in accordance with the chapter “electrical diagrams” of the catalogue “source-changeover systems”.

Characteristics of the IVE unit

■ external connection terminal block:
□ inputs: circuit breaker control signals
□ outputs: status of the SDE contacts on the “Normal” and “Replacement” source circuit breakers
■ 2 connectors for the two “Normal” and “Replacement” source circuit breakers:
□ inputs:
- status of the OF contacts on each circuit breaker (ON or OFF)
- status of the SDE contacts on the “Normal” and “Replacement” source circuit breakers
□ outputs: power supply for operating mechanisms
■ control voltage:
□ 24 to 250 V DC
□ 48 to 415 V 50/60 Hz - 440 V 60 Hz.
The IVE unit control voltage must be same as that of the circuit breaker operating mechanisms.

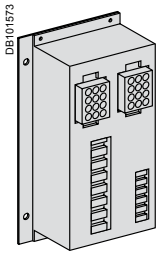

IVE unit.

Necessary equipment

For Masterpact NT and NW, each circuit breaker must be equipped with:
■ a remote-operation system made up of:
□ MCH gear motor
□ MX or MN opening release
□ XF closing release
□ PF “ready to close” contact
□ CDM mechanical operation counter
■ an available OF contact
■ one to three CE connected-position contacts (carriage switches) on drawout circuit

Source-changeover systems
Standard configuration

Compact NS, Masterpact NT and NW

Types of mechanical interlocking	Possible combinations	Typical electrical diagrams	Diagram no.
2 devices			
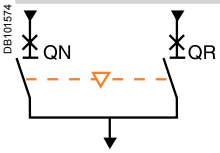	QN QR 0 0 1 0 0 1	**Masterpact NT and NW:** ■ electrical interlocking with lockout after fault: □ permanent replacement source (without IVE) □ with EPO by MX (without IVE) □ with EPO by MN (without IVE) □ permanent replacement source (with IVE) □ with EPO by MX (with IVE) □ with EPO by MN (with IVE) ■ automatic control without lockout after fault: □ permanent replacement source (without IVE) □ engine generator set (without IVE) ■ automatic control with lockout after fault: □ permanent replacement source (with IVE) □ engine generator set (with IVE) ■ BA/UA controller (with IVE)	 **51201139** **51201140** **51201141** **51201142** **51201143** **51201144** **51156226** **51156227** **51156904** **51156905** **51156903**

Masterpact NW only

Types of mechanical interlocking	Possible combinations	Typical electrical diagrams	Diagram no.
3 devices: 2 "Normal" sources and 1 "Replacement" source			
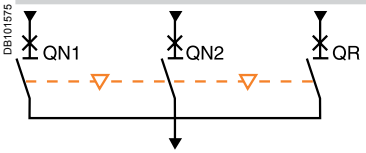	QN1 QN2 QR 0 0 0 1 1 0 0 0 1	■ electrical interlocking: □ without lockout after fault □ with lockout after fault	 **51156906** **51156907**
3 devices: 2 "Normal" sources and 1 "Replacement" source with source selection			
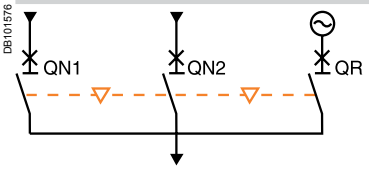	QN1 QN2 QR 0 0 0 1 0 0 0 0 1 1 1 0 0 1 0	■ automatic control with engine generator set: □ without lockout after fault (with MN) □ with lockout after fault (with MN)	 **51156908** **51156909**
3 devices: 3 sources, only one device			
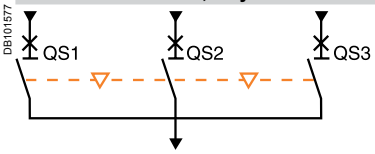	QS1 QS2 QS3 0 0 0 1 0 0 0 1 0 0 0 1	■ electrical interlocking: □ without lockout after fault □ with lockout after fault	 **51156910** **51156911**
3 devices: 2 sources + 1 coupling			
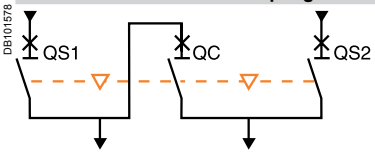	QS1 QC QS2 0 0 0 1 0 1 1 1 0 0 1 1 1 0 0 (1) 0 0 1 (1) *(1) possible by forcing operation*	■ electrical interlocking: □ without lockout after fault □ with lockout after fault ■ automatic control with lockout after fault	 **51156912** **51156913** **51156914**

"Lockout after fault" option. This option makes it necessary to manually reset the device following fault tripping.

By combining a remote-operated source-changeover system with an integrated BA or UA automatic controller, it is possible to automatically control source transfer according to user-selected sequences.
These controllers can be used on source-changeover systems comprising 2 circuit breakers.
For source-changeover systems comprising 3 circuit breakers, the automatic control diagram must be prepared by the installer as a complement to to diagrams provided in the "electrical diagrams" section of this catalogue.

PB100855_SE

BA controller.

PB100856_SE

UA controller.

Controller		BA	UA
Compatible circuit breakers		All Masterpact circuit breakers	
4-position switch			
Automatic operation		■	■
Forced operation on "Normal" source		■	■
Forced operation on "Replacement" source		■	■
Stop (both "Normal" and "Replacement" sources off)		■	■
Automatic operation			
Monitoring of the "Normal" source and automatic transfer		■	■
Generator set startup control			■
Delayed shutdown (adjustable) of generator set			■
Load shedding and reconnection of non-priority circuits			■
Transfer to the "Replacement" source if one of the phases of the "Normal" phase is absent			■
Test			
By opening the P25M circuit breaker supplying the controller		■	
By pressing the test button on the front of the controller			■
Indications			
Circuit breaker status indication on the front of the controller: on, off, fault trip		■	■
Automatic mode indicating contact		■	■
Other functions			
Selection of type of "Normal" source (single-phase or three-phase) (1)			■
Voluntary transfer to "Replacement" source (e.g. energy management commands)		■	■
During peak-tariff periods (energy management commands) forced operation on "Normal" sourceif "Replacement" source not operational			■
Additional contact (not part of controller). Transfer to "Replacement" source only if contact is closed. (e.g. used to test the frequency of UR).		■	■
Setting of maximum startup time for the replacement source			■
Options			
Communication option			
Power supply			
Control voltages (2)	110 V	■	■
	220 to 240 V 50/60 Hz	■	■
	380 to 415 V 50/60 Hz and 440 V 60 Hz	■	■
Operating thresholds			
Undervoltage	0.35 Un ⩽ voltage ⩽ 0.7 Un	■	■
Phase failure	0.5 Un ⩽ voltage ⩽ 0.7 Un		■
Voltage presence	voltage ⩾ 0.85 Un	■	■
IP degree of protection (EN 60529) and IK degree of protection against external mechanical impacts (EN 50102)			
Front	IP40	■	■
Side	IP30	■	■
Connectors	IP20	■	■
Front	IK07	■	■
Characteristics of output contacts (dry, volt-free contacts)			
Rated thermal current (A)	8		
Minimum load	10 mA at 12 V		
Output contacts:			
Position of the Auto/Stop switch		■	■
Load shedding and reconnection order			■
Generator set start order.			■

		AC				DC	
Utilisation category (IEC 947-5-1)		AC12	AC13	AC14	AC15	DC12	DC13
Operational current (A)	24 V	8	7	5	5	8	2
	48 V	8	7	5	5	2	-
	110 V	8	6	4	4	0.6	-
	220/240 V	8	6	4	3	-	-
	250 V	-	-	-	-	0.4	-
	380/415 V	5	-	-	-	-	-
	440 V	4	-	-	-	-	-
	660/690 V	-	-	-	-	-	-

(1) For example, 220 V single-phase or 220 V three-phase.
(2) The controller is powered by the ACP control plate. The same voltage must be used for the ACP plate, the IVE unit and the circuit-breaker operating mechanisms. If this voltage is the same as the source voltage, then the "Normal" and "Replacement" sources can be used directly for the power supply. If not, an isolation transformer must be used.

Masterpact NW with corrosion protection 800-4000 A

PB106363A50

Masterpact NW circuit breakers with corrosion protection are designed for use in industrial environments with high concentrations of sulphur compounds. Examples include paper mills, oil refineries, steel works and water treatment plants, all of which produce large quantities of sulphur dioxide (SO2) or hydrogen sulphate (H2S).
Under such conditions, silver-plated parts rapidly turn black due to the formation of silver sulphate (AgS) on the surface, an insulating material that can lead to abnormal temperature rise in electrical contacts. This phenomenon can have serious consequences on all equipment installed inside a switchboard.
Circuit breakers used in such environments generally require frequent maintenance and therefore a large number of replacement devices on the site. Furthermore, problems are often encountered even with intensive maintenance.
Masterpact NW circuit breakers with corrosion protection receive special surface treatment on all parts exposed to corrosion and critical with respect to electrical continuity. In this way, the availability of electrical power and operating safety are ensured without special maintenance for the following environmental condition classes as defined by standard IEC 721-3-3:
■ 3C3 for H2S (concentrations from 2.1 to 7.1 x 10^{-6})
■ 3C4 for SO2 (concentrations from 4.8 to 14.8 x 10^{-6}).

The Masterpact NW range of power circuit breakers with corrosion protection offers the following features:
■ rated current from 800 A to 4000 A
■ 3 and 4-pole models
■ drawout circuit breaker
■ operational voltage up to 690 V AC
■ Ics breaking capacity of 100 kA at 220/415 V AC
■ reverse feed possible
■ stored-energy mechanism for instantaneous closing (source coupling).
■ 3 types of RMS electronic protection
■ adjustable long-time settings from 0.4 to 1 In, with fine adjustment via local keypad or remote supervisor
■ electronic functions dedicated to energy management and power-quality analysis.

The Masterpact NW range complies with the main standards and certifications:

■ IEC 60947-1 and 60947-2
■ IEC 68230 (damp heat) and IEC 68252 severity level 2 (salt mist)
■ IEC 60068-2-42 and IEC 60068-2-43 for corrosive environments:
□ SO2 : tested to IEC 60068-2-42 in a 3C4 environment as defined by IEC 60721-3-3
□ H2S: tested to IEC 60068-2-43 in a 3C3 environment as defined IEC 60721-3-3.

A complete range of electrical accessories and auxiliaries:

■ motor mechanism (MCH)
■ undervoltage release (MN, MNR)
■ shunt trip unit (MX)
■ closing release (XF)
■ auxiliary contacts (OF)
■ low-level indication contacts (SDE, PF, CD, CT, CE and EF)
■ electrical closing button (BPFE)
■ locking by padlocks and/or keylocks.
■ source-changeover systems for 2 or 3 devices

Maximum safety

The Masterpact NW range with corrosion protection offers the same safety features as the standard version:
■ positive contact indication
■ high impulse withstand voltage (12 kV)
■ suitable for isolation in compliance with IEC 60947-2, as indicated by the disconnector symbol on the front face:
■ Front face insulation class 2, allowing class 2 installations with breaker control from outside.

Characteristics according to IEC 60 947-2

				NW08H2	NW10H2	NW12H2	NW16H2	NW20H2	NW25H2	NW32H2	NW40bH2
Number of poles				3, 4							
Rated insulation voltage		**Ui** (V)		1000							
Rated operational voltage		**Ue** (V)		690							
Closing time (ms)				< 50							
Rated current	**In** (A)	Vertical connection	40 °C	800	1000	1250	1600	2000	2500	3200	4000
			45 °C	800	1000	1250	1600	2000	2500	3200	4000
			50 °C	800	1000	1250	1600	2000	2500	3200	4000
			55 °C	800	1000	1250	1550	1900	2500	3150	4000
			60 °C	800	1000	1250	1500	1800	2500	3000	4000
		Horizontal connection	40 °C	800	1000	1250	1600	2000	2500	-	4000
			45 °C	800	1000	1250	1550	1900	2500	-	4000
			50 °C	800	1000	1250	1500	1800	2500	-	4000
			55 °C	800	1000	1250	1450	1700	2400	-	4000
			60 °C	800	1000	1250	1400	1600	2300	-	3900
4th pole rating				800	1000	1250	1600	2000	2500	3200	4000
Rated utlimate breaking capacity	**Icu** (kA rms) CA 50/60 Hz		220/440 V	100	100	100	100	100	100	100	100
			690 V	85	85	85	85	85	85	85	85
Rated service breaking capacity	**Ics** = Icu x...			100 %	100 %	100 %	100 %	100 %	100 %	100 %	100 %
Break time (ms)			Total maxi	25 to 30 with no intentional delay							

Dimensions and connection

DB124951

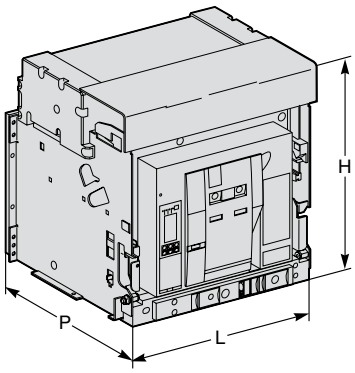

Masterpact NW08 to NW32 with corrosion protection.

DB124952

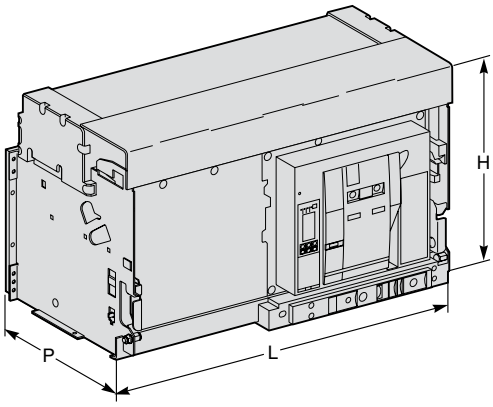

Masterpact NW40b with corrosion protection.

Drawout device	L (mm)		H (mm)	P (mm)
	3P	4P		
800 to 3200 A	441	556	439	395
4000 A	786	1016	479	395

Connections

■ Power circuits:

□ vertical rear connections as standard

□ possibility of conversion to horizontal rear connections on-site by rotating the connectors, except for NW32, available with vertical rear connections only.

■ Auxiliaries connected to terminal block on circuit breaker front face.

Earthing switch Masterpact

The Masterpact Earthing Switch can be racked into any compatible Masterpact NW chassis in place of a Masterpact circuit breaker. It is used to interconnect and earth the phase and neutral conductors of an electrical installation to ensure the safety of personnel during servicing. It can be locked in earthed position.

PB104426A50

Main characteristics	
Rated insulation voltage Rated operational voltage Rated current Latching capacity Rated short-time withstand current	1000 V 690 V 800 to 4000 A 135 kA peak 60 kA/1s 50 kA/3s
Compatibility	Compatible with drawout NW08 to NW40 circuit breakers, types N1/H1/NA/HA, 3-pole and 4-pole rear connected versions
Remote indication	12 ON/OFF indication contacts that can be used according to the chassis auxiliary wiring

The Earthing Switch is compatible with Masterpact NW08 to NW40 type N1, H1, NA and HA circuit breakers in both 3-pole and 4-pole versions. It has two parts:
■ a chassis earthing kit for installation on the Masterpact NW chassis. Two different versions are available for 3-pole and 4-pole chassis.
■ the Earthing Switch itself, which is a specific Masterpact NW device that can be racked into any chassis equipped with an earthing kit, in place of the circuit breaker. Two versions are available (3-pole and 4-pole).

An earthing kit must be installed on the chassis of each circuit breaker protecting a circuit that may require earthing while work is being carried out. However, a single earthing switch is often sufficient for an entire installation if only one circuit is to be serviced at any given time.
The standard Earthing Switch comes with the short-circuit bar installed across the bottom (downstream) connections for earthing of the upstream portion of the circuit. The user can easily move the short-circuit bar to the top connections if the downstream portion of the circuit needs to be earthed.

Earthing kit
(for chassis)

DB125557

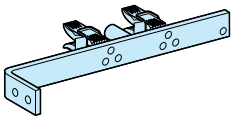

Earthing switch
(front view)

DB125558

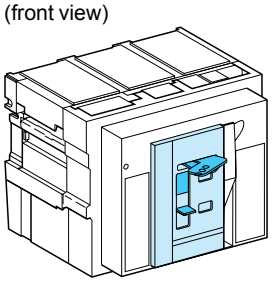

Earthing switch (rear view)

DB125559

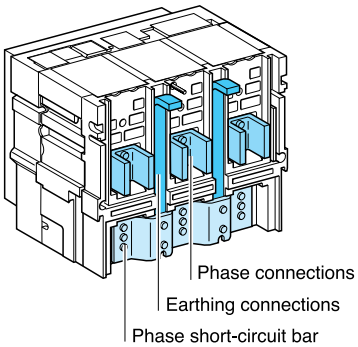

With short-circuit bar on the bottom connections.

DB125560

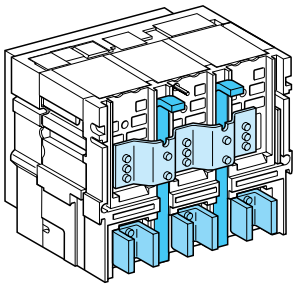

With short-circuit bar on the top connections.

DB125561

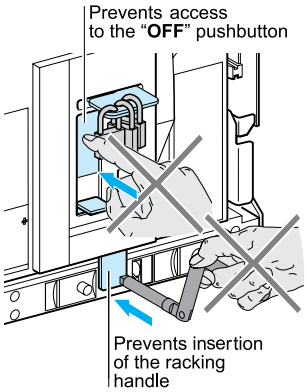

Locking in earthed position by 3 padlocks

The standard Earthing Switch can be locked in earthed position by one to three padlocks as long as the following conditions are satisfied:
■ the Earthing Switch must be in "connected" position in a chassis equipped with an earthing kit
■ the Earthing Switch must be in "ON" position.
Under these conditions, the installation is earthed.

When the Earthing Switch is locked in earthed position:
■ it cannot be moved to "disconnected" position (a shutter prevents insertion of the racking handle)
■ it cannot be turned "OFF" (a shutter prevents access to the "OFF" pushbutton).

Typical applications

The earthing switch is used to protect maintenance personnel working on an installation against the risk of accidental connection of a parallel source or energisation by reverse power. Protection is provided by earthing the part of the installation that is to be worked on.

Application n°1

Earthing of one section of a coupled busbar arrangement

DB120865

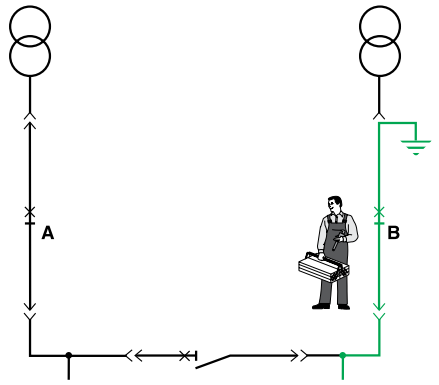

When working on section **B**, the bus coupler is normally open. To protect personnel in the event of accidental closing of this device, an earthing switch with the upstream terminals earthed is installed in place of the circuit breaker at **B**. In this way section **B** will remain at earth potential under all circumstances and the personnel can work in complete safety.

Application n°2

Earthing an outgoer

DB120866

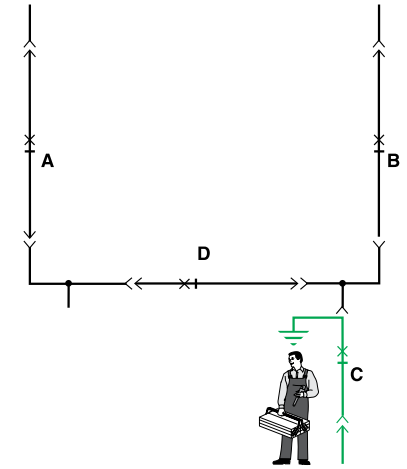

When working on outgoer **C**, installation of an earthing switch with the upstream terminals earthed (in place of the circuit breaker at **C**) ensures complete safety even if all the other devices on the installation are closed.

Application n°3

Earthing of an MV/LV transformer

DB120867

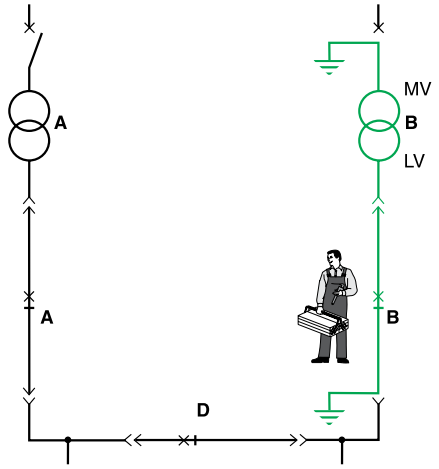

When working on an MV/LV transformer, upstream earthing is carried out by means of the usual medium voltage and high voltage procedures. Installation of an earthing switch with the downstream terminals earthed (in place of the circuit breaker at **B**) maintains the part of the installation between the upstream MV circuit breaker and the downstream LV circuit breaker at earth potential. In this way, the personnel can work in complete safety even if the rest of the installation is energised.

Earthing switch Masterpact

Dimensions and connection

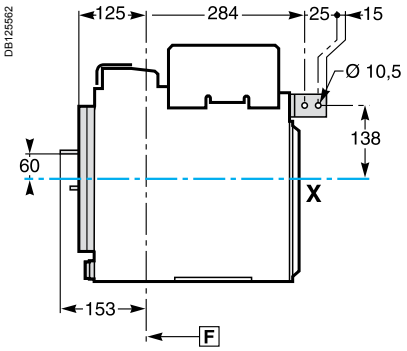

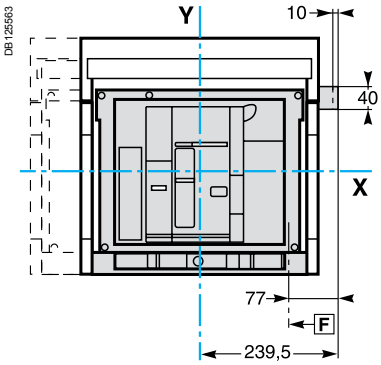

Remote-operated source-changeover systems

Mechanical interlocking
Compact NS or Masterpact NT/NW

Mechanical interlocking of two or three devices is used to create a remote-operated source-changeover system. A basic mechanical interlocking system enhances the reliability of system operation.

PB103832-51

Interlocking of two electrically-operated Compact NS circuit breakers using a base plate.

Interlocking of two Compact NS100 to 630 devices using a base plate

A base plate designed for two Compact circuit breakers can be installed horizontally or vertically on a mounting rail. Interlocking is carried out on the base plate by a mechanism located behind the breakers. Access to the circuit breaker controls and trip units is conserved. Circuit breakers must be fixed or plug-in versions, with or without earth-leakage protection or measurement modules. The base plate and the circuit breakers are supplied separately.

■ **Base plate for Compact NS100 to 250 devices**
This base plate is intended for two Compact NS100 to 250 devices.

■ **Base plate for Compact NS400 to 630 devices**
This base plate is intended for two Compact NS400 to 630 devices. It may also be used, without any modifications, to interlock a fixed Compact NS100 to 250 with a Compact NS400 or 630 device.

An adapter kit is required for plug-in versions of the Compact NS100 to 250 devices.
Compact NS100 to 250 devices, in both fixed and plug-in versions, may be equipped with spreaders.

Possible combinations of "Normal" and "Replacement" Compact source circuit breakers

"Normal N"	"Replacement" R				
	NS100	NS160	NS250	NS400	NS630
NS100					
Ratings 12,5... 100 A	■	■	■	■	■
NS160					
Ratings 12,5...160 A	■	■	■	■	■
NS250					
Ratings 12,5...250 A	■	■	■	■	■
NS400					
Ratings 160... 400 A	■	■	■	■	■
NS630					
Ratings 250... 630 A	■	■	■	■	■

DB126268

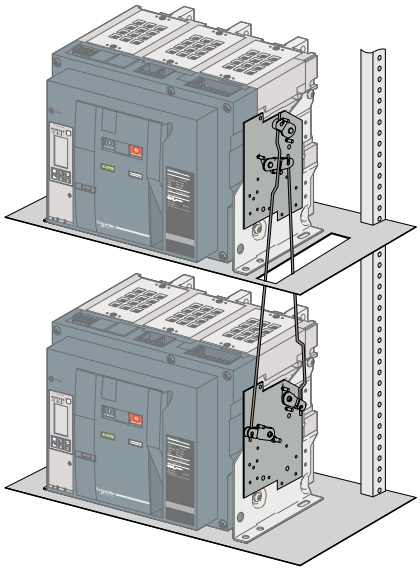

Interlocking of two Masterpact NT or NW circuit breakers using connecting rods.

Interlocking of two Compact NS630b to 1600 or two Masterpact NT and NW devices using connecting rods

The two devices must be mounted one above the other (either 2 fixed or 2 withdrawable/drawout devices).
Combinations are possible between Compact NS630b to NS1600 devices and between Masterpact NT and Masterpact NW devices.

Installation

This function requires:
■ an adaptation fixture on the right side of each circuit breaker or switch-disconnector
■ a set of connecting rods with no-slip adjustments.

The adaptation fixtures, connecting rods and circuit breakers or switch-disconnectors are supplied separately, ready for assembly by the customer.
The maximum vertical distance between the fixing planes is 900 mm.

Possible combinations of "Normal" and "Replacement" source circuit breakers

"Normal N"	"Replacement" R			
	NS630b to NS1600	NT06 to NT16	NW08 to NW40	NW40b to NW63
NS630b to NS1600				
Ratings 250... 1600 A	■			
NT06 to NT16				
Ratings 250... 1600 A		■	■	■
NW08 to NW40				
Ratings 320... 4000 A		■	■	■
NW40b to NW63				
Ratings 4000... 6300 A		■	■	■

Mechanical interlocking
Compact NS or Masterpact NT/NW

Interlocking of two Masterpact circuit breakers using cables.

Interlocking of two Compact NS630b to 1600 or two Masterpact NT/NW or up to three Masterpact NW devices using cables

For cable interlocking, the circuit breakers may be mounted one above the other or side-by-side.
The interlocked devices may be fixed or drawout, three-pole or four-pole, and have different ratings and sizes.

Interlocking between two devices (Compact NS630b to 1600 or Masterpact NT and NW)

This function requires:
- an adaptation fixture on the right side of each device
- a set of cables with no-slip adjustments.

The maximum distance between the fixing planes (vertical or horizontal) is 2000 mm.

Interlocking between three devices (Masterpact NW only)

This function requires:
- a specific adaptation fixture for each type of interlocking, installed on the right side of each device
- two or three sets of cables with no-slip adjustments.

The maximum distance between the fixing planes (vertical or horizontal) is 1000 mm.

Installation

The adaptation fixtures, sets of cables and circuit breakers or switch-disconnectors are supplied separately, ready for assembly by the customer.

Installation conditions for cable interlocking systems:
- cable length: 2.5 m
- radius of curvature: 100 mm
- maximum number of curves: 3.

Possible combinations of “Normal” and “Replacement” source circuit breakers

“Normal N”	“Replacement” R			
	NS630b to NS1600	NT06 to NT16	NW08 to NW40	NW40b to NW63
NS630b to NS1600				
Ratings 250... 1600 A	■			
NT06 to NT16				
Ratings 250... 1600 A		■	■	■
NW08 to NW40				
Ratings 320... 4000 A		■	■	■
NW40b to NW63				
Ratings 4000... 6300 A		■	■	■

It is not possible to combine Compact NS630b to 1600 and Masterpact NT (or Masterpact NW) devices.
All combinations of two Masterpact NT and Masterpact NW devices are possible, whatever the rating or size of the devices.

Possible combinations of three device

“Normal N”	“Replacement” R			
	NS630b to NS1600	NT06 to NT16	NW08 to NW40	NW40b to NW63
NS630b to NS1600				
Ratings 250... 1600 A				
NT06 to NT16				
Ratings 250... 1600 A				
NW08 to NW40				
Ratings 320... 4000 A			■	■
NW40b to NW63				
Ratings 4000... 6300 A			■	■

Only Masterpact NW may be used for three-device combinations.

Types of mechanical interlocking and combinations

See page A-4 to page A-9.

Remote-operated source-changeover systems

General characteristics
Compact NS

Range			Compact	
Types of devices			NS100 to NS250	NS400 to NS630
Types of circuit breakers			N / H / L	N / H / L
Switch-disconnector version			NA	NA
Mixing possibilities			all devices NS100 to NS250 N/H/L/NA fixed or plug-in	all devices NS100 to NS630 N/H/L/NA fixed or plug-in
Electrical characteristics				
Rating			15 to 250 A	15 to 630 A
Insulating voltage Ui (V AC)			750	750
Positive break indication			■	■
Number of poles (N and R devices must have the same number of poles)			3, 4	
Electrical durability			See page A-66	
Operating temperature			–25 °C to +70 °C (50 °C for 440 V - 60 Hz)	
Control characteristics				
Control voltage		AC	48 to 415 V - 50/60 Hz 440 V - 60 Hz	
		DC	24-250 V	
Maximum consumption		AC	500 VA	500 VA
		DC	500 W	500 W
Minimum switching time			800 ms	800 ms
Interlocking				
Mechanical (see page A-62)				
Electrical	by diagram (without IVE)		■	■
	with IVE unit		■	■
	auxiliary contacts used by circuit breaker		1 OF + 1 SDE	1 OF + 1 SDE
Protection and measurement				
Overload protection		long time	■	■
Short-circuit protection		short time	■	■
		instantaneous	■	■
Earth-fault protection				■
Zone selective interlocking (ZSI)				■
Earth-leakage protection	by Vigi module		■	■
	by control unit			
	by add-on Vigirex relay		■	■
Current measurements				
Voltage, frequency, power measurements, etc.				
Indication and control auxiliaries				
Available auxiliary indication contacts			OF + SD (+ SDV)	2 OF + SD (+ SDV)
Voltage releases	MX shunt		■	■
	MN undervoltage		■	■
Voltage presence indicator			■	■
Voltage transformer			■	■
Ammeter module			■	■
Insulation monitoring module			■	■
Source-changeover controller				
With permanent replacement source			■ BA controller	
With standby generator set			■ UA controller	
Remote communication via bus				
Device status indications			■	■
Device remote control				
Transmission of settings				
Indication and identification of protection status and alarms				
Transmission of measurements				
Installation and connection				
Fixed front connected				
Fixed rear connected			■ (long rear connections)	■ (long rear connections)
Withdrawable, plug-in or drawout			■ (plug-in on base)	■ (plug-in on base)
Installation and connection accessories				
Downstream coupling accessory			■	■
Bare-cable connectors			■	■
Terminal extensions			■	■
Terminal shields and inter-phase barriers				■
Locking	by padlock		■	■
	by keylock		■	■
Front panel escutcheons			■	■

General characteristics
Compact NS, Masterpact NT/NW

Compact	Masterpact	
NS630b to NS1600	NT06 to 16	NW08 to 63
N / H / L NA	N1 / H1 / H2 / H3 / L1 NA / HA / HF	N1 / H1 / H2 / H3 / L1 NA / HA / HF
all devices NS630b to 1600 N/H/L/NA fixed or plug-in	all mixing possibilities (fixed, drawout or fixed + drawout) N1/H1/H2/H3/L1/NA/HA/HF	all mixing possibilities (fixed, drawout or fixed + drawout) N1/H1/H2/H3/L1/NA/HA/HF
250 to 1600 A	600 to 1600 A	800 to 6300 A
750	1000	1000
	■	■
	3, 4	
See page A-66		
	–25 °C to +70 °C (50 °C for 440 V - 60 Hz)	
	48 to 415 V - 50/60 Hz 440 V - 60 Hz	
	24-250 V	
180 VA 180 W	180 VA 180 W	180 VA 180 W
800 ms	800 ms	800 ms
■ ■ 1 OF + 1 CE (+ SDE)	■ only with UA or BA 1 OF + 1 CE + 1 PF	■ only with UA or BA 1 OF + 1 CE + 1 PF
■	■	■
■ ■	■ ■	■ ■
■	■	■
■	■	■
■ ■	■ ■	■ ■
■	■ ■	■ ■
2 OF + SD	2 OF + SD	2 OF + SD
■ ■	■ ■	■ ■
	■	■
	■	■
	■	■
	■	■
	■ BA controller	
	■ UA controller	
■	■	■
■	■	■
■	■	■
■	■	■
■ (vertical or horizontal)	■ (vertical or horizontal)	■ (vertical or horizontal)
■ (drawout)	■ (drawout)	■ (drawout)
■		
■		
■ ■	■ ■	■ ■
■	■	■

Remote-operated source-changeover systems

Mech. and elect. durability Interpact INS, Compact NS, Masterpact NT/NW

Interpact INS switch-disconnectors

			INS250-100		INS250-160		INS250-200		INS250	
Number of poles			3, 4		3, 4		3, 4		3, 4	
Conventional thermal current (A)	Ith	at 60 °C	100		160		200		250	
Rated operational current (A)	Ie	**Electrical AC, 50/60 Hz**	**AC22A**	**AC23A**	**AC22A**	**AC23A**	**AC22A**	**AC23A**	**AC22A**	**AC23A**
		440-480 V	100	100	160	160	200	200	250	250
		660-690 V	100	100	160	160	200	200	250	250
Durability (category A) (O_N-C_R-O_R-C_N cycles)		Mechanical	15000		15000		15000		15000	
		Electrical AC, 50/60 Hz	**AC22A**	**AC23A**	**AC22A**	**AC23A**	**AC22A**	**AC23A**	**AC22A**	**AC23A**
		440-480 V	1500	1500	1500	1500	1500	1500	1500	1500
		660-690 V	1500	1500	1500	1500	1500	1500	1500	1500

			INS320		INS400		INS500		INS630	
Number of poles			3, 4		3, 4		3, 4		3, 4	
Conventional thermal current (A)	Ith	at 60 °C	320		400		500		630	
Rated operational current (A)	Ie	**Electrical AC, 50/60 Hz**	**AC22A**	**AC23A**	**AC22A**	**AC23A**	**AC22A**	**AC23A**	**AC22A**	**AC23A**
		440-480 V	320	320	400	400	500	500	630	630
		660-690 V	320	320	400	400	500	500	630	630
Durability (category A) (O_N-C_R-O_R-C_N cycles)		Mechanical	10000		10000		10000		10000	
		Electrical AC, 50/60 Hz	**AC22A**	**AC23A**	**AC22A**	**AC23A**	**AC22A**	**AC23A**	**AC22A**	**AC23A**
		440-480 V	1500	1500	1500	1500	1500	1500	1500	1500
		660-690 V	1500	1500	1500	1500	1500	1500	1500	1500

Compact NS100-NS1600

	NS100-250	NS400-630	NS630b-NS1600
Number of poles	3, 4	3, 4	3, 4
Rated current In (A)	100 to 250	400 to 630	630 to 1600
Mechanical durability (O_N-C_R-O_R-C_N cycles)	10000	8000	8000
Electrical durability at In (O_N-C_R-O_R-C_N cycles) for ≤ 440 V and 480 V NEMA (2)	10000	3000	2000
Electrical durability at In (O_N-C_R-O_R-C_N cycles) for U = 500 V to 690 V (2)	1500	1500	1500

Masterpact NT06-NT16/NW08-NW63 (1)

	NT06-NT10	NT12-NT16	NW08-NW16	NW20	NW25-NW40	NW50-NW63
Number of poles	3, 4	3, 4	3, 4	3, 4	3, 4	3, 4
Rated current In (A)	630 to 1600	1250 to 1600	800 to 1600	2000	2500 to 4000	5000 to 6300
Mechanical durability (O_N-C_R-O_R-C_N cycles)	8000	8000	10000	10000	10000	5000
Electrical durability at In (O_N-C_R-O_R-C_N cycles) for ≤ 440 V and 480 V NEMA (2)	6000	6000 NT16: 3000	10000	8000	5000	1500
Electrical durability at In (O_N-C_R-O_R-C_N cycles) for U = 500 V to 690 V (2)	3000	2000 NT16: 1000	10000	6000	2500	1500

(1) Mechanical and electrical durability not applicable to Masterpact H3 and L versions.
(2) Electrical durability tests carried out with a power factor of 0.8 as per IEC 947-2.

Note:
O_N: opening of Normal source
C_R: closing of Replacement source
O_R: opening of Replacement source
C_N: closing of Normal source

Remote-operated

Connection and insulation accessories for Compact NS and INS ≤ 630 A

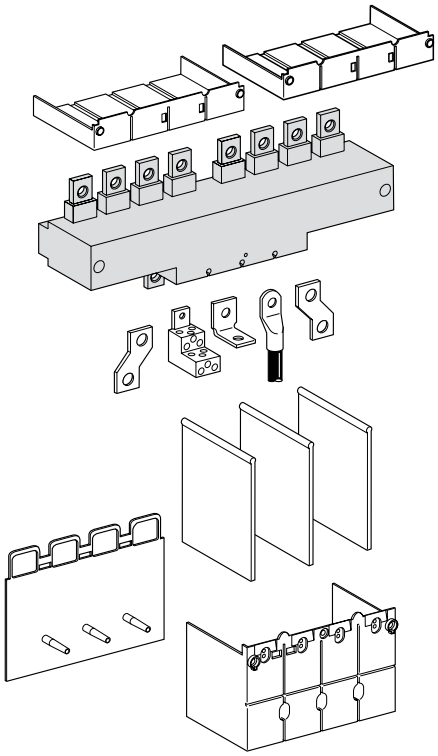

Downstream coupling accessory

This accessory simplifies connection to bars and cables with lugs.
It may be used to couple two circuit breakers (Compact NS100 to 630) or switch-disconnectors (Interpact INS/INV100 to 630) of the same size.
Pitch between outgoing terminals:

- Interpact INS250 and INV100 to 250: 35 mm
- Interpact INS/INV320 to 630: 52.5 mm
- Compact NS100 to 250: 35 mm
- Compact NS400 to 630: 52.5 mm.

For Compact NS circuit breakers, the downstream coupling accessory can be used only with **fixed versions**.

Connection and insulation accessories

The coupling accessory can be fitted with the same connection and insulation accessories as the circuit breakers and switch-disconnectors.

Possible uses	Downstream coupling	
	Possible	**Outgoing pitch (mm)**
Manual source-changeover systems		
INS250 (100 to 250 A) with rotary handle	■	35
NS100/250 with rotary handle	■	35
NS100/250 on base plate with toggle control	■	35
INS400/630 (320 to 630 A) with rotary handle	■	52.5
NS400/630 with rotary handle	■	52.5
NS400/630 on base plate with toggle control	■	52.5
Complete source-changeover assembly		
INS250 (100 to 250 A)	■	35
INS400/630 (320 to 630 A)	■	52.5
Remote-operated source-changeover systems		
NS100/250	■	35
NS400/630	■	52.5

Remote-operated source-changeover systems
Electrical interlocking

Electrical interlocking is used with the mechanical interlocking system.
An automatic controller may be added to take into account information from the distribution system.

Moreover, the relays controlling the "normal" and "replacement" circuit breakers must be mechanically and/or electrically interlocked to prevent them from giving simultaneous closing commands.

Electrical interlocking is carried out by an electrical control device.
For Compact NS up to 630 A, electrical interlocking is implemented by the IVE unit integrating control circuits and an external terminal block in accordance with the pages C-2 to C-5 of the chapter "Electric diagrams" of this catalogue. The integrated control circuits implement the time delays required for correct source transfer.
For Compact NS630b to 1600 and Masterpact, this function can be implemented in one of two ways:
■ using the IVE unit
■ by an electrician based on the diagrams in accordance with the pages C-9 to C-19 of the chapter "Electric diagrams" of this catalogue..

Characteristics of the IVE unit
■ external connection terminal block:
□ inputs: circuit breaker control signals
□ outputs: status of the SDE contacts on the "Normal" and "Replacement" source circuit breakers
■ 2 connectors for the two "Normal" and "Replacement" source circuit breakers:
□ inputs:
- status of the OF contacts on each circuit breaker (ON or OFF)
- status of the SDE contacts on the "Normal" and "Replacement" source circuit breakers
□ outputs: power supply for operating mechanisms
■ control voltage:
□ 24 to 250 V DC
□ 48 to 415 V 50/60 Hz - 440 V 60 Hz.
The IVE unit control voltage must be same as that of the circuit breaker operating mechanisms.

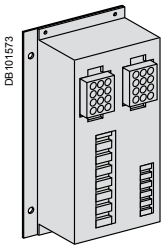

IVE unit.

Necessary equipment
For Compact NS100 to 630, each circuit breaker must be equipped with:
■ a motor mechanism
■ an OF contact
■ an SDE contact.
The components are supplied ready for assembly and the circuit breakers prewired. The prewiring must not be modified.

For Compact NS630b to 1600, each circuit breaker must be equipped with:
■ a motor mechanism
■ an available OF contact
■ a CE connected-position contact (carriage switch) on withdrawable circuit breakers
■ an SDE contact.

For Masterpact NT and NW, each circuit breaker must be equipped with:
■ a remote-operation system made up of:
□ MCH gear motor
□ MX or MN opening release
□ XF closing release
□ PF "ready to close" contact
■ an available OF contact
■ one to three CE connected-position contacts (carriage switches) on drawout circuit breakers (depending on the installation).

Standard configurations

Compact NS, Masterpact NT and NW

2 devices

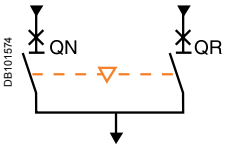

QN	QR
0	0
1	0
0	1

Typical electrical diagrams	Diagram no.
Compact NS100 to 630:	
■ electrical interlocking without emergency power off (EPO) auxiliaries:	**51201177**
□ with EPO by MN	**51201178**
□ with EPO by MX	**51201179**
Compact NS630b to 1600:	
■ electrical interlocking with lockout after fault:	
□ permanent replacement source (without IVE)	**51201180**
□ with EPO by MX (without IVE)	**51201181**
□ with EPO by MN (without IVE)	**51201182**
□ permanent replacement source (with IVE)	**51201183**
□ with EPO by MX (with IVE)	**51201184**
□ with EPO by MN (with IVE)	**51201185**
■ automatic control without lockout after fault:	
□ permanent replacement source (without IVE)	**51201186**
□ engine generator set (without IVE)	**51201187**
Masterpact NT and NW:	
■ electrical interlocking with lockout after fault:	
□ permanent replacement source (without IVE)	**51201139**
□ with EPO by MX (without IVE)	**51201140**
□ with EPO by MN (without IVE)	**51201141**
□ permanent replacement source (with IVE)	**51201142**
□ with EPO by MX (with IVE)	**51201143**
□ with EPO by MN (with IVE)	**51201144**
■ automatic control without lockout after fault:	
□ permanent replacement source (without IVE)	**51156226**
□ engine generator set (without IVE)	**51156227**
■ automatic control with lockout after fault:	
□ permanent replacement source (with IVE)	**51156904**
□ engine generator set (with IVE)	**51156905**
■ BA/UA controller (with IVE)	**51156903**

Masterpact NW only

3 devices: 2 “Normal” sources and 1 “Replacement” source

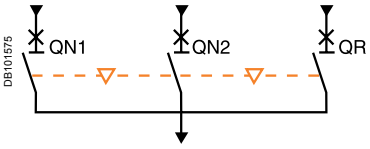

QN1	QN2	QR
0	0	0
1	1	0
0	0	1

Typical electrical diagrams	Diagram no.
■ electrical interlocking:	
□ without lockout after fault	**51156906**
□ with lockout after fault	**51156907**

3 devices: 2 “Normal” sources and 1 “Replacement” source with source selection

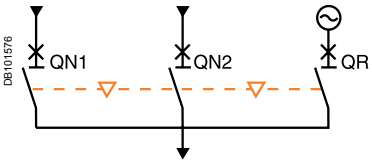

QN1	QN2	QR
0	0	0
1	0	0
0	0	1
1	1	0
0	1	0

Typical electrical diagrams	Diagram no.
■ automatic control with engine generator set:	
□ without lockout after fault (with MN)	**51156908**
□ with lockout after fault (with MN)	**51156909**

3 devices: 3 sources, only one device

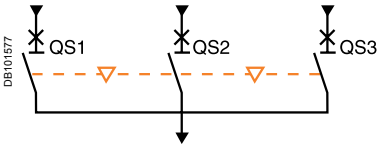

QS1	QS2	QS3
0	0	0
1	0	0
0	1	0
0	0	1

Typical electrical diagrams	Diagram no.
■ electrical interlocking:	
□ without lockout after fault	**51156910**
□ with lockout after fault	**51156911**

3 devices: 2 sources + 1 coupling

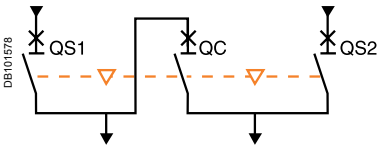

QS1	QC	QS2	
0	0	0	
1	0	1	
1	1	0	
0	1	1	
1	0	0	(1)
0	0	1	(1)

(1) possible by forcing operation

Typical electrical diagrams	Diagram no.
■ electrical interlocking:	
□ without lockout after fault	**51156912**
□ with lockout after fault	**51156913**
■ automatic control with lockout after fault	**51156914**

“Lockout after fault” option. This option makes it necessary to manually reset the device following fault tripping.

Associated controllers
Controller selection

By combining a remote-operated source-changeover system with an integrated BA or UA automatic controller, it is possible to automatically control source transfer according to user-selected sequences.
These controllers can be used on source-changeover systems comprising 2 circuit breakers.
For source-changeover systems comprising 3 circuit breakers, the automatic control diagram must be prepared by the installer as a complement to to diagrams provided in the "electrical diagrams" section of this catalogue.

PB100865_SE_30

BA controller.

PB100866_SE_30

UA controller.

Controller		BA	UA
Compatible circuit breakers		All Compact NS and Masterpact circuit breakers	
4-position switch			
Automatic operation		■	■
Forced operation on "Normal" source		■	■
Forced operation on "Replacement" source		■	■
Stop (both "Normal" and "Replacement" sources off)		■	■
Automatic operation			
Monitoring of the "Normal" source and automatic transfer		■	■
Generator set startup control			■
Delayed shutdown (adjustable) of generator set			■
Load shedding and reconnection of non-priority circuits			■
Transfer to the "Replacement" source if one of the phases of the "Normal" phase is absent			■
Test			
By opening the P25M circuit breaker supplying the controller		■	
By pressing the test button on the front of the controller			■
Indications			
Circuit breaker status indication on the front of the controller: on, off, fault trip		■	■
Automatic mode indicating contact		■	■
Other functions			
Selection of type of "Normal" source (single-phase or three-phase) (1)			■
Voluntary transfer to "Replacement" source (e.g. energy management commands)		■	■
During peak-tariff periods (energy management commands) forced operation on "Normal" sourceif "Replacement" source not operational			■
Additional contact (not part of controller). Transfer to "Replacement" source only if contact is closed. (e.g. used to test the frequency of UR).		■	■
Setting of maximum startup time for the replacement source			■
Options			
Communication option			
Power supply			
Control voltages (2)	110 V	■	■
	220 to 240 V 50/60 Hz	■	■
	380 to 415 V 50/60 Hz and 440 V 60 Hz	■	■
Operating thresholds			
Undervoltage	0.35 Un ⩽ voltage ⩽ 0.7 Un	■	■
Phase failure	0.5 Un ⩽ voltage ⩽ 0.7 Un		■
Voltage presence	voltage ⩾ 0.85 Un	■	■
IP degree of protection (EN 60529) and IK degree of protection against external mechanical impacts (EN 50102)			
Front	IP40	■	■
Side	IP30	■	■
Connectors	IP20	■	■
Front	IK07	■	■
Characteristics of output contacts (dry, volt-free contacts)			
Rated thermal current (A)	8		
Minimum load	10 mA at 12 V		
Output contacts:			
Position of the Auto/Stop switch		■	■
Load shedding and reconnection order			■
Generator set start order.			■

		AC				DC	
Utilisation category (IEC 947-5-1)		AC12	AC13	AC14	AC15	DC12	DC13
Operational current (A)	24 V	8	7	5	5	8	2
	48 V	8	7	5	5	2	-
	110 V	8	6	4	4	0.6	-
	220/240 V	8	6	4	3	-	-
	250 V	-	-	-	-	0.4	-
	380/415 V	5	-	-	-	-	-
	440 V	4	-	-	-	-	-
	660/690 V	-	-	-	-	-	-

(1) For example, 220 V single-phase or 220 V three-phase.
(2) The controller is powered by the ACP control plate. The same voltage must be used for the ACP plate, the IVE unit and the circuit breaker operating mechanisms. If this voltage is the same as the source voltage, then the "Normal" and "Replacement" sources can be used directly for the power supply. If not, an isolation transformer must be used.

Controller installation

ACP control plate.

ACP control plate

The control plate provides in a single unit:
- protection for the BA or UA controller with two highly limiting P25M circuit breakers (infinite breaking capacity) for power drawn from the AC source
- control of circuit-breaker ON and OFF functions via two relay contactors
- connection of the circuit breakers to the BA or UA controller via a built-in terminal block.

Control voltages
- 110 V 50/60 Hz.
- 220 to 240 V 50/60 Hz.
- 380 to 415 V 50/60 Hz and 440 V 60 Hz.

The same voltage must be used for the ACP control plate, the controller and the circuit breaker operating mechanisms.

Installation

Connection between the ACP control plate and the IVE unit may use:
- wiring done by the installer
- prefabricated wiring (optional).

Installation of the BA and UA controllers

The BA and UA controllers may be installed in one of two manners:
- directly mounted on the ACP control plate
- mounted on the front panel of the switchboard
- if the length of the connection between the controller and the control plate (ACP) is less than or equal to 1 m, the connecting cable **ref. 29368** can be ordered as an optional extra. Cables longer than 1 m, but not longer than 2 m will be the responsibility of the installer.

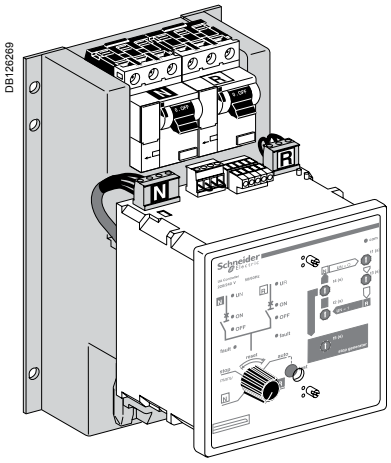

Mounting on the ACP control plate.

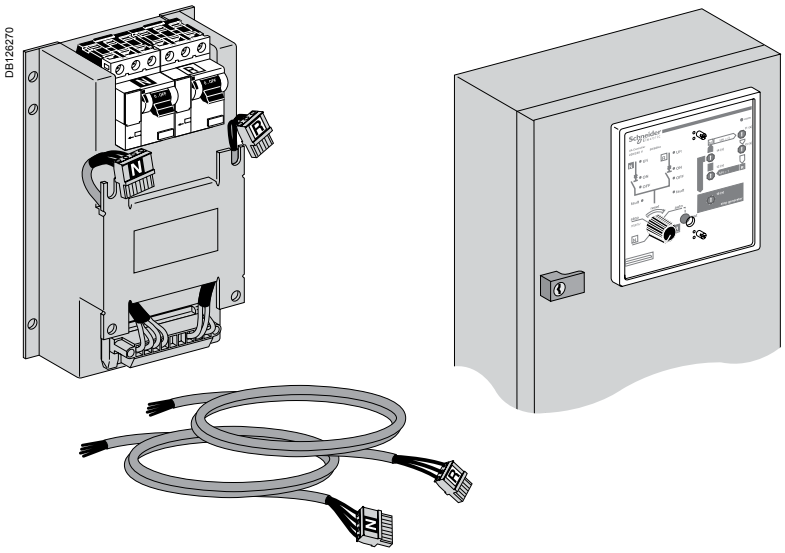

Mounting on the front panel of the switchboard.

Associated controllers
BA controller

The BA controller is used to create simple source-changeover systems that switch from one source to another depending on the presence of voltage UN on the “Normal” source.
It is generally used to manage two permanent sources and can control Compact NS and Masterpact NT/NW circuit breakers and switch-disconnectors.

PB100858-SE

DB126266

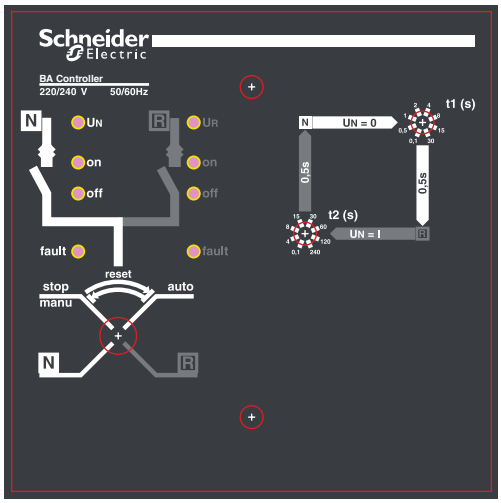

Front of the BA controller.

Operating modes
A four-position switch may be used to select:
- automatic operation
- forced operation on the “Normal” source
- forced operation on the “Replacement” source
- stop (both “Normal” and “Replacement” sources off).

Setting the time delays
Time delays are set on the front of the controller.
t1. delay between detection that the “Normal” source has failed and the transmission of the order to open the “Normal” source circuit breaker (adjustable from 0.1 to 30 seconds).
t2. delay between detection that the “Normal” source has returned and the transmission of the order to open the “Replacement” source circuit breaker (adjustable from 0.1 to 240 seconds).

Circuit breaker commands and status indications
The status of the circuit breakers is indicated on the front of the controller.
- ON, OFF, fault.

A built-in terminal block may be used to connect the following input/output signals:
- inputs:
  - voluntary order to transfer to source R (e.g. for special tariffs, etc.)
  - additional control contact (not part of the controller). Transfer to the “Replacement” source takes place only if the contact is closed (e.g. used to test the frequency of UR, etc.)
- outputs:

indication of operation in automatic or stop mode via changeover contacts.

Test
It is possible to test the operation of the BA controller by turning OFF (opening) the P25M circuit breaker for the “Normal” source and thus simulating a failure of voltage UN.

BA controller operating sequences

Switch set to Auto (automatic operation and special-tariff mode)

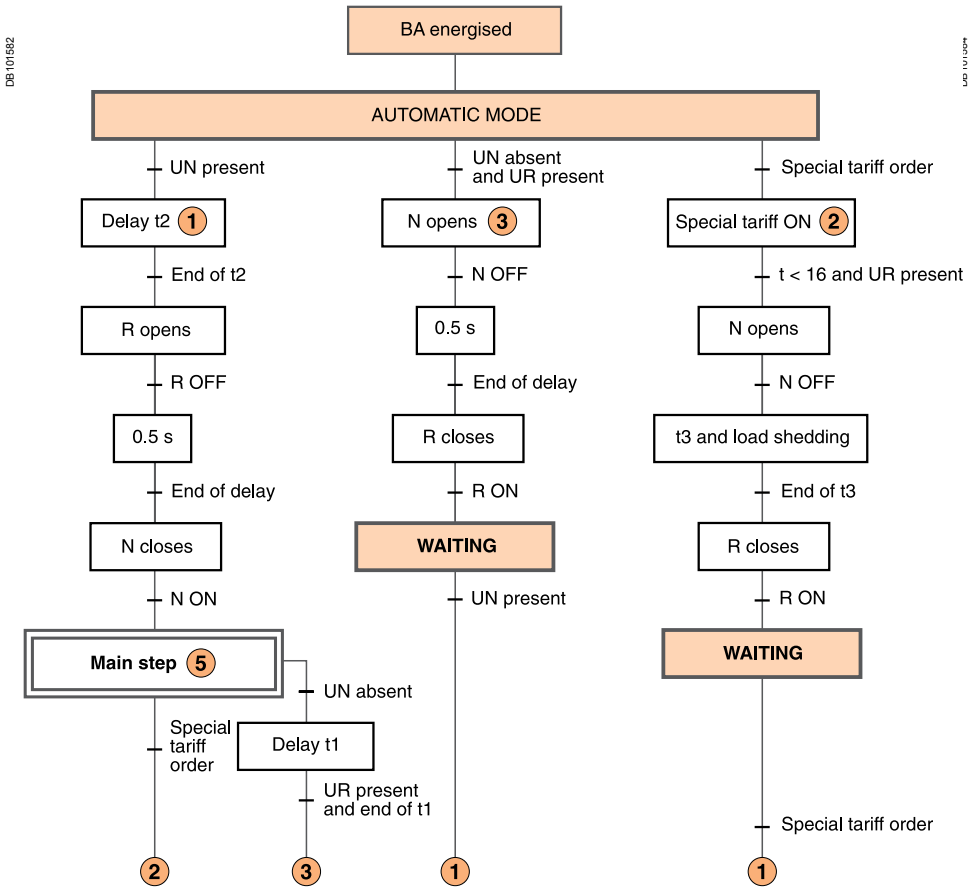

Switch set to the "N" position (forced operation on the "Normal" source)

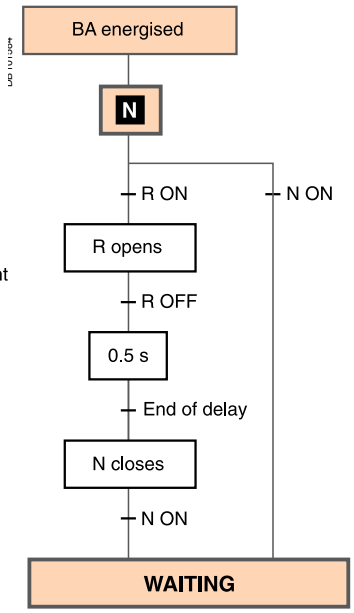

Switch set to the "R" position (forced operation on the "Replacement" source)

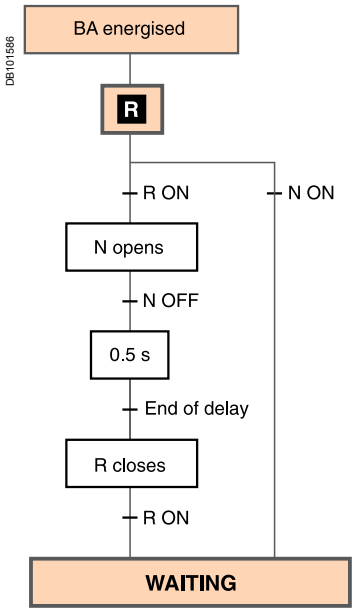

Switch set to the "Stop" position

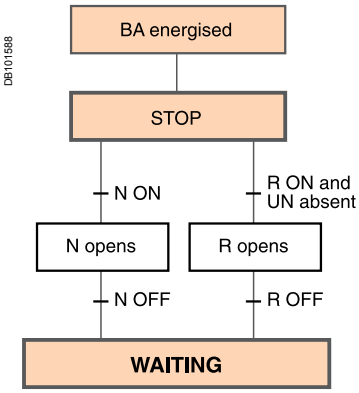

Key
UN : "Normal" source voltage
UR : "Replacement" source voltage
N : "Normal" source circuit breaker
R : "Replacement" source circuit breaker

1 *The number sends to the indicated step when the condition is true.*

WAITING The system exits this mode when the operating mode is modified or when an external event occurs (e.g. failure or return of UN).

TOOLS

schneider-electric.com

This international site allows you to access all the Schneider Electric products in just 2 clicks via comprehensive range data-sheets, with direct links to:

- complete library: technical documents, catalogs, FAQs, brochures…
- selection guides from the e-catalog.
- product discovery sites and their Flash animations.

You will also find illustrated overviews, news to which you can subscribe, the list of country contacts…

CAD software and tools

The CAD software and tools enhance productivity and safety. They help you create your installations by simplifying product choice through easy browsing in the Schneider Electric offers.
Last but not least, they optimise use of our products while also complying with standards and proper procedures.

Installation recommendations

Presentation *3*
Functions and characteristics *A-1*

Operating conditions B-2

Installation in switchboard B-4

Door interlock catch B-6

Control wiring B-7

Power connection B-8

Recommended busbars drilling
Masterpact NT06 to NT16 B-10
Masterpact NW08 to NW63 B-11

Busbar sizing B-12

Temperature derating
Power dissipation and input / output resistance B-14

Derating in switchboards B-15

Substitution kit
Fixed / drawout devices 800 to 3200 A B-22

Dimensions and connection *C-1*
Electrical diagrams *D-1*
Additional characteristics *E-1*
Catalogue numbers and order form *F-1*

Operating conditions

Masterpact circuit breakers have been tested for operation in industrial atmospheres. It is recommended that the equipment be cooled or heated to the proper operating temperature and kept free of excessive vibration and dust.

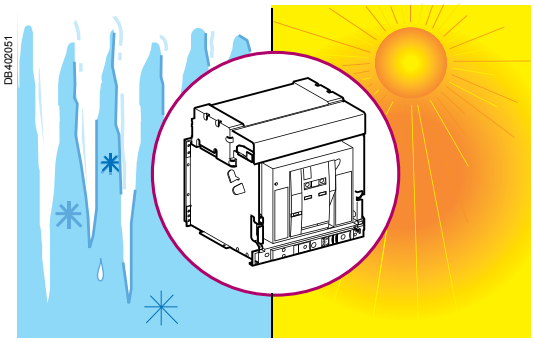

Ambient temperature

Masterpact devices can operate under the following temperature conditions:
- the electrical and mechanical characteristics are stipulated for an ambient temperature of -5 °C to +70 °C
- circuit-breaker closing is guaranteed down to -35 °C.

Storage conditions are as follows:
- -40 to +85 °C for a Masterpact device without its control unit
- -25 °C to +85 °C for the control unit.

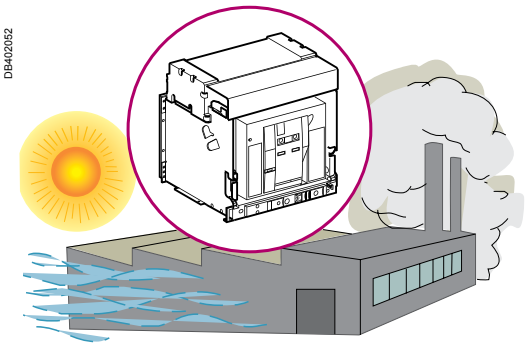

Extreme atmospheric conditions

Masterpact devices have successfully passed the tests defined by the following standards for extreme atmospheric conditions:
- IEC 60068-2-1: dry cold at -55 °C
- IEC 60068-2-2: dry heat at +85 °C
- IEC 60068-2-30: damp heat (temperature +55 °C, relative humidity 95 %)
- IEC 60068-2-52 level 2: salt mist.

Masterpact devices can operate in the industrial environments defined by standard IEC 60947 (pollution degree up to 4).
It is nonetheless advised to check that the devices are installed in suitably cooled switchboards without excessive dust.

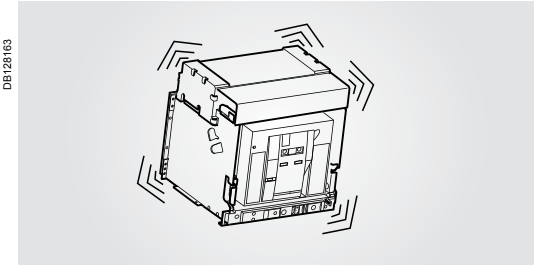

Vibrations

Masterpact devices have successfully passed testing in compliance with IEC 60068-2-6 for the following vibration levels:
- 2 to 13.2 Hz: amplitude +/- 1 mm
- 13.2 to 100 Hz: constant acceleration 0.7 g.

Vibration testing to these levels is required by merchant marine inspection organisations (Veritas, Lloyd's, etc).

Some applications have vibration profiles outside of this standard and require special attention during application design, installation, and use. Excessive vibration may cause unexpected tripping, damage to connections or to other mechanical parts. Please refer to the Masterpact maintenance guide (causes of accelerated ageing / operating conditions / vibrations) for additional information.
Examples of applications with high vibration profiles could include:
- wind turbines
- power frequency converters that are installed in the same switchboard or close proximity to the Masterpact circuit breaker
- emergency generators
- high vibration marine applications such as thrusters, anchor positioning systems, etc.

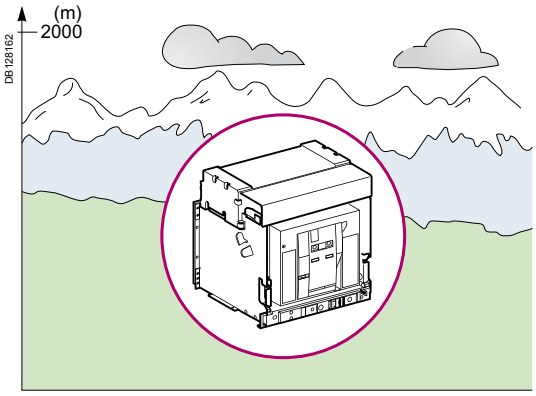

Altitude

At altitudes higher than 2000 metres, the modifications in the ambient air (electrical resistance, cooling capacity) lower the following characteristics as follows:

Altitude (m)		2000	3000	4000	5000
Impulse withstand voltage Uimp (kV)		12	11	10	8
Rated insulation voltage (Ui)		1000	900	780	700
Maximum rated operationnal voltage 50/60 Hz Ue (V)	NT, NW except H10	690	690	630	560
	NW H10	1000	890	795	700
Rated current 40 °C		1 x In	0.99 x In	0.96 x In	0.94 x In

Intermediate values may be obtained by interpolation.

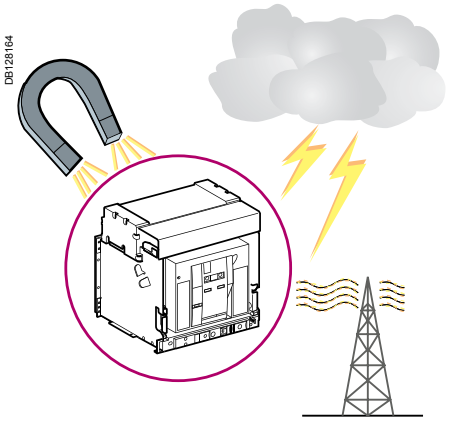

Electromagnetic disturbances

Masterpact devices are protected against:

- overvoltages caused by devices that generate electromagnetic disturbances
- overvoltages caused by atmospheric disturbances or by a distribution-system outage (e.g. failure of a lighting system)
- devices emitting radio waves (radios, walkie-talkies, radar, etc.)
- electrostatic discharges produced by users.

Masterpact devices have successfully passed the electromagnetic-compatibility tests (EMC) defined by the following international standards:

- IEC 60947-2, appendix F
- IEC 60947-2, appendix B (trip units with earth-leakage function).

The above tests guarantee that:

- no nuisance tripping occurs
- tripping times are respected.

Installation in switchboard

Possible positions

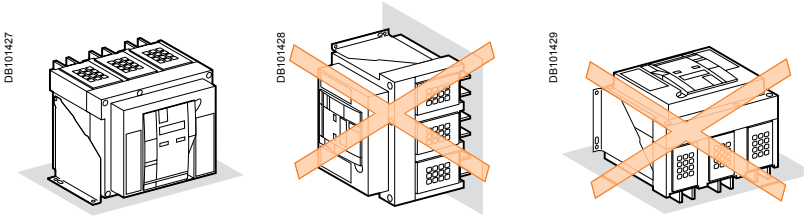

Power supply

Masterpact devices can be supplied either from the top or from the bottom without reduction in performance, in order to facilitate connection when installed in a switchboard.

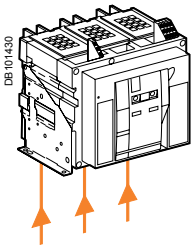

Mounting the circuit-breaker

It is important to distribute the weight of the device uniformily over a rigid mounting surface such as rails or a base plate.
This mounting plane should be perfectly flat (tolerance on support flatness: 2 mm). This eliminates any risk of deformation which could interfere with correct operation of the circuit breaker.
Masterpact devices can also be mounted on a vertical plane using the special brackets.

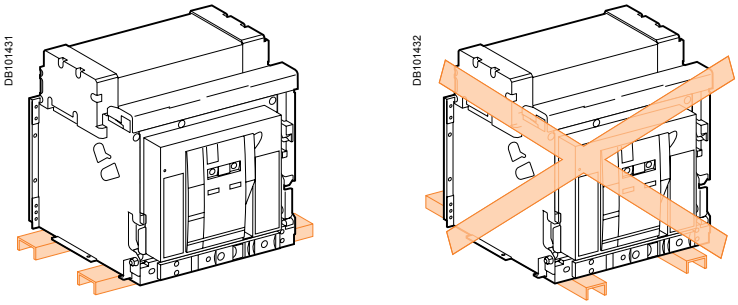

Mounting on rails.

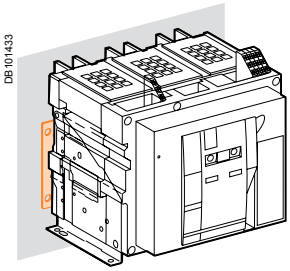

Mounting with vertical brackets.

Partitions

Sufficient openings must be provided in partitions to ensure good air circulation around the circuit breaker;
Any partition between upstream and downstream connections of the device must be made of non-magnetic material.
For high currents, of 2500 A and upwards, the metal supports or barriers in the immediate vicinity of a conductor must be made of non-magnetic material **A**.
Metal barriers through which a conductor passes must not form a magnetic loop.

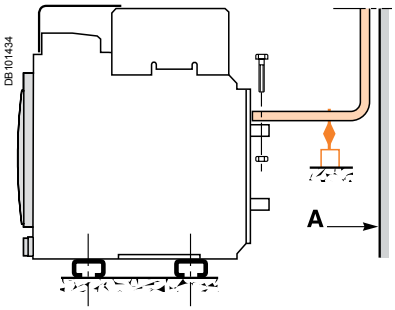

***A** : non magnetic material.*

Busbars (NT, NW)

The mechanical connection must be exclude the possibility of formation of a magnetic loop around a conductor.

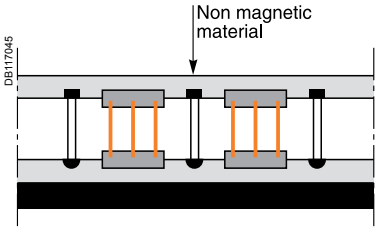

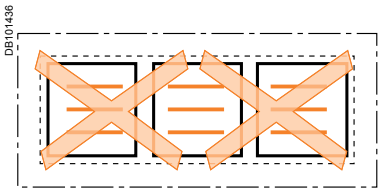

Busbars (NT)

For live busbars installed immediately above the circuit breaker (respecting the 100 mm safety clearance), the distance between bars must be 65 mm minimum.
In a 1000 V system, the bars must be insulated.

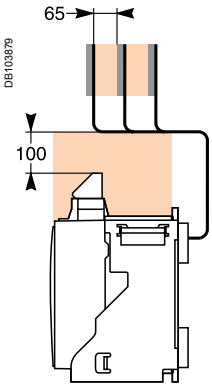

Interphase barrier

If the insulation distance between phases is not sufficient (≤ 14 mm), it is advised to install phase barriers (taking into account the safety clearances).
Mandatory for a Masterpact NT > 500 V.

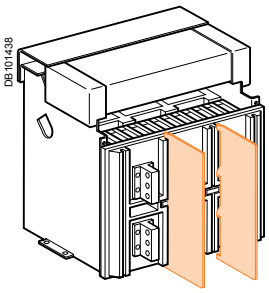

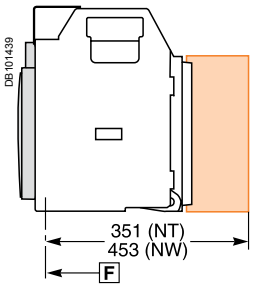

Door interlock catch

Door interlock VPEC

Mounted on the right or left-hand side of the chassis, this device inhibits opening of the cubicle door when the circuit breaker is in “connected” or “test” position. It the breaker is put in the “connected” position with the door open, the door may be closed without having to disconnect the circuit breaker.

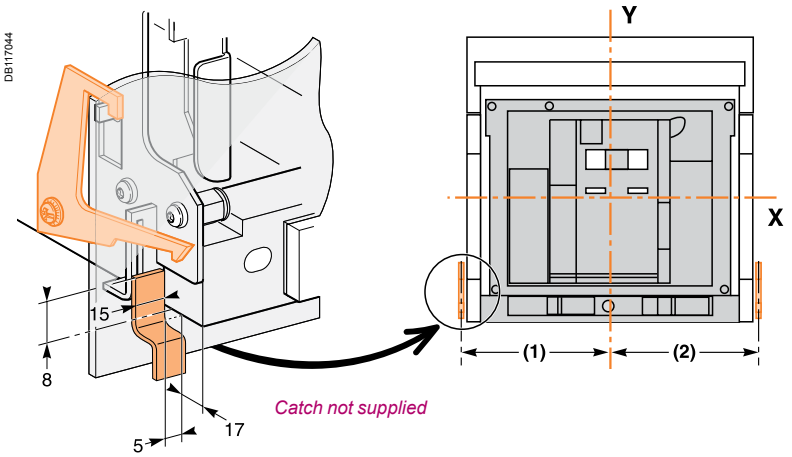

Dimensions (mm)

Type	(1)	(2)
NT08-16 (3P)	135	168
NT08-16 (4P)	205	168
NW08-40 (3P)	215	215
NW08-40 (4P)	330	215
NW40b-63 (3P)	660	215
NW40b-63 (4P)	775	215

Breaker in “connected” or “test” position

Door cannot be opened

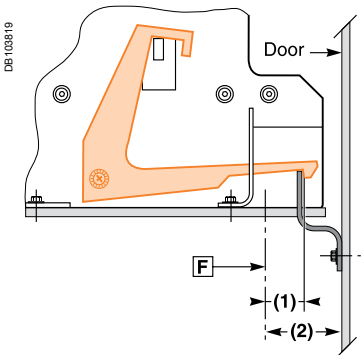

Breaker in “disconnected” position

Door can be opened

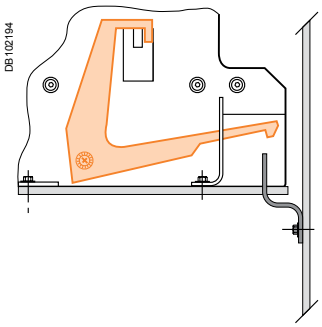

Dimensions (mm)

Type	(1)	(2)
NT	5	23
NW	83	103

Cable-type door interlock IPA

This option prevents door opening when the circuit breaker is closed and prevents circuit breaker closing when the door is open.
For this, a special plate associated with a lock and a cable is mounted on the right side of the circuit breaker. With this interlock installed, the source changeover function cannot be implemented.

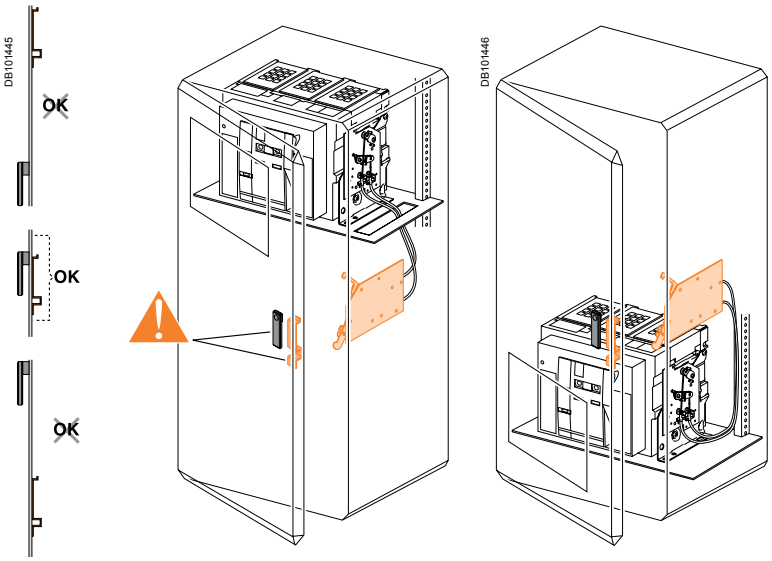

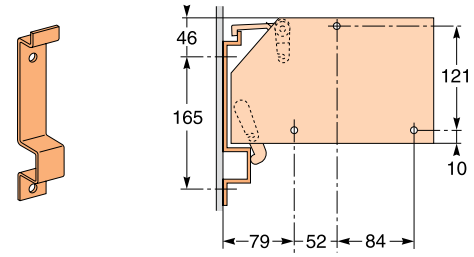

Note: *the door interlock can either be mounted on the right side or the left side of the breaker.*
F *: datum.*

Wiring of voltage releases

During pick-up, the power consumed is approximately 150 to 200 VA. For low control voltages (12, 24, 48 V), maximum cable lengths are imposed by the voltage and the cross-sectional area of cables.

Recommended maximum cable lengths (meter).

		12 V		24 V		48 V	
		2,5 mm²	1,5 mm²	2,5 mm²	1,5 mm²	2,5 mm²	1,5 mm²
MN	U source 100 %	–	–	58	35	280	165
	U source 85 %	–	–	16	10	75	45
MX-XF	U source 100 %	21	12	115	70	550	330
	U source 85 %	10	6	75	44	350	210

Note: *the indicated length is that of each of the two wires.*

24 V DC power-supply module

External 24 V DC power-supply module for Micrologic (F1-, F2+)

- do not connect the positive terminal (F2+) to earth
- the negative terminal (F1-) can be connected to earth, except in IT systems
- a number of Micrologic control units and M6C modules can be connected to the same 24 V DC power supply (the consumption of a Micrologic control unit or an M6C module is approximately 100 mA)
- do not connect any devices other than a Micrologic control unit or an M6C module if voltage > 480 V AC or in an environment with a high level of electromagnetic disturbance
- the maximum length for each conductor is ten metres. For greater distances, it is advised to twist the supply wires together
- the 24 V DC supply wires must cross the power cables perpendicularly. If this is difficult, it is advised to twist the supply wires together
- the technical characteristics of the external 24 V DC power-supply module for Micrologic control units are indicated on page A-27.

Communication bus

- do not connect the positive terminal (E1) to earth
- the negative terminal (E2) can be connected to earth
- a number of “device” or “chassis” communication modules can be connected to the same 24 V DC power supply (the consumption of each module is approximately 30 mA).

Note: *wiring of ZSI: it is recommended to use twisted shielded cable. The shield must be connected to earth at both ends.*

Power connection

Cables connections

If cables are used for the power connections, make sure that they do not apply excessive mechanical forces to the circuit breaker terminals.
For this, make the connections as follows:
■ extend the circuit breaker terminals using short bars designed and installed according to the recommendations for bar-type power connections:
□ for a single cable, use solution **B** opposite
□ for multiple cables, use solution **C** opposite
■ in all cases, follow the general rules for connections to busbars:
□ position the cable lugs before inserting the bolts
□ the cables should firmly secured to the framework **E**.

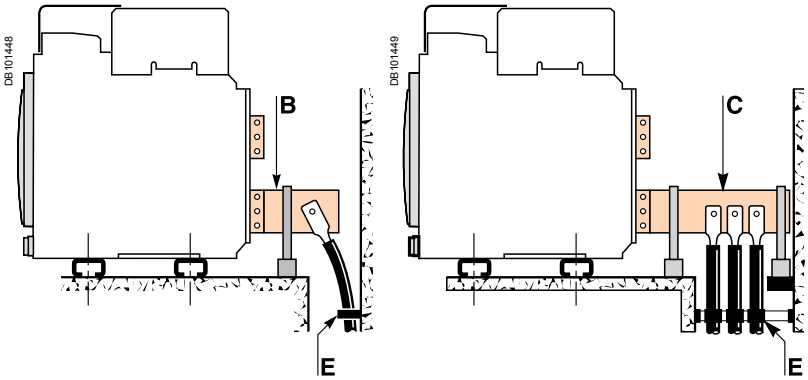

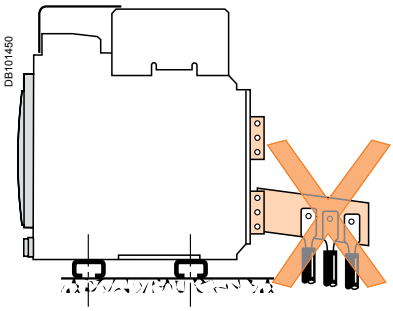

Busbars connections

The busbars should be suitably adjusted to ensure that the connection points are positioned on the terminals before the bolts are inserted **B**
The connections are held by the support which is solidly fixed to the framework of the switchboard, such that the circuit breaker terminals do not have to support its weight **C**. (This support should be placed close to the terminals).

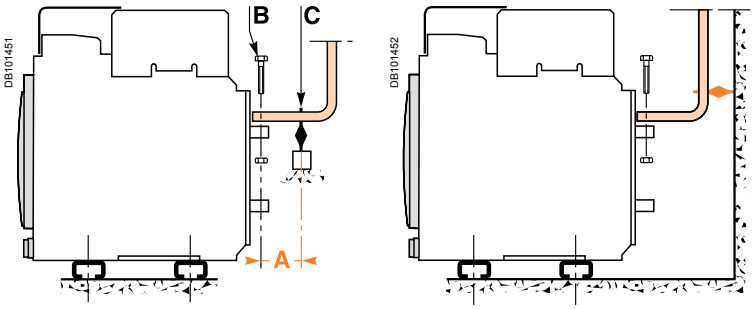

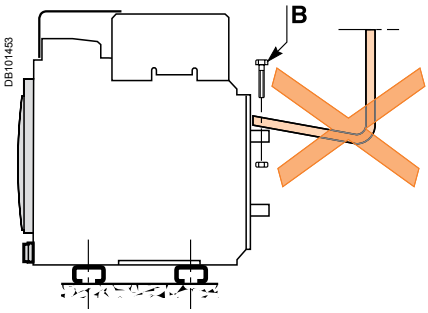

Electrodynamic stresses

The first busbar support or spacer shall be situated within a maximum distance from the connection point of the breaker (see table below). This distance must be respected so that the connection can withstand the electrodynamic stresses between phases in the event of a short circuit.

Maximum distance A between busbar to circuit breaker connection and the first busbar support or spacer with respect to the value of the prospective short-circuit current.

Isc (kA)	30	50	65	80	100	150
Distance A (mm)	350	300	250	150	150	150

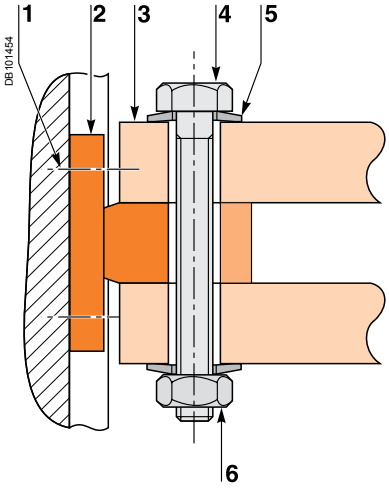

1 Terminal screw factory-tightened to 16 Nm (NW), 13 Nm (NT).
2 Breaker terminal.
3 Busbar.
4 Bolt.
5 Washer.
6 Nut.

Clamping

Correct clamping of busbars depends amongst other things, on the tightening torques used for the nuts and bolts. Over-tightening may have the same consequences as under-tightening.
For connecting busbars (Cu ETP-NFA51-100) to the circuit breaker, the tightening torques to be used are shown in the table below.
These values are for use with copper busbars and steel nuts and bolts, class 8.8. The same torques can be used with AGS-T52 quality aluminium bars (French standard NFA 02-104 or American National Standard H-35-1).

Examples

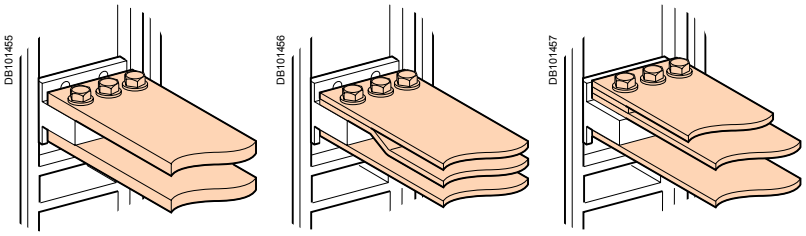

Tightening torques			
Ø (mm) Nominal	**Ø (mm) Drilling**	**Tightening torques (Nm) with grower or flat washers**	**Tightening torques (Nm) with contact or corrugatec washers**
10	11	37.5	50

Busbar drilling

Examples

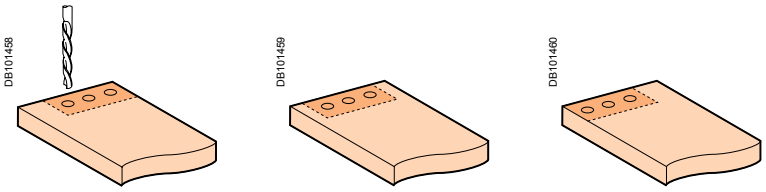

Isolation distance

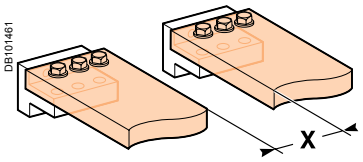

Dimensions (mm)

Ui	X min
600 V	8 mm
1000 V	14 mm

Busbar bending

When bending busbars maintain the radius indicated below(a smaller radius would cause cracks).

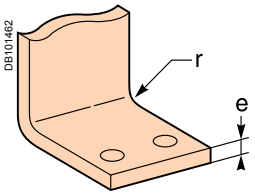

Dimensions (mm)

e	Radius of curvature r Min	Recommended
5	5	7.5
10	15	18 to 20

Recommended busbars drilling

Masterpact NT06 to NT16

Rear connection

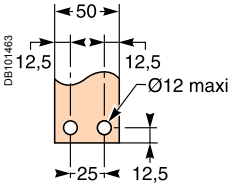

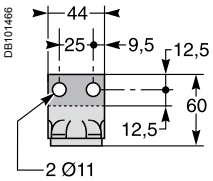

Rear connection with spreaders

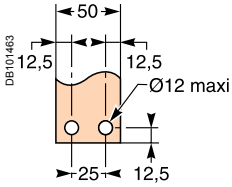

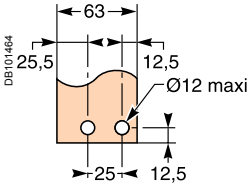

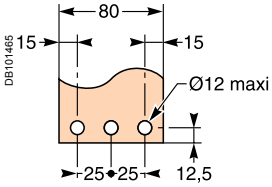

Middle left or middle right spreader for 4P

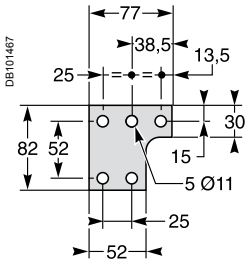

Middle spreader for 3P

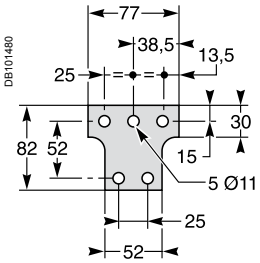

Left or right spreader for 4P

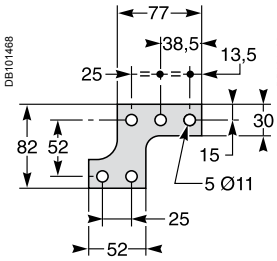

Left or right spreader for 3P

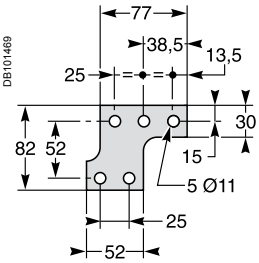

Vertical rear connection

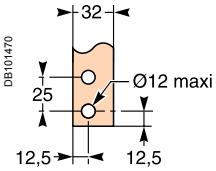

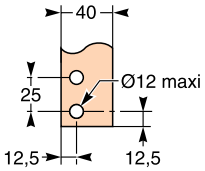

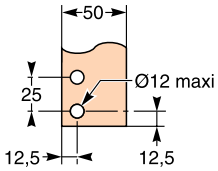

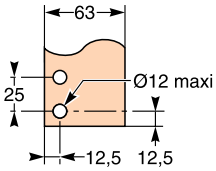

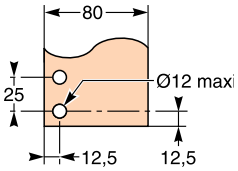

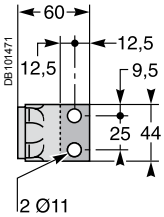

Front connection

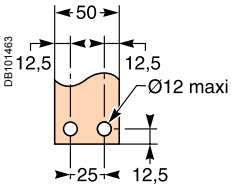

Top connection

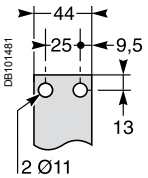

Bottom connection

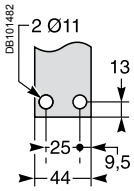

Front connection via vertical connection adapters

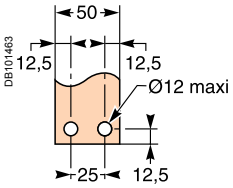

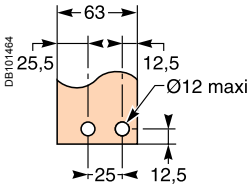

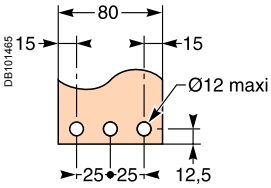

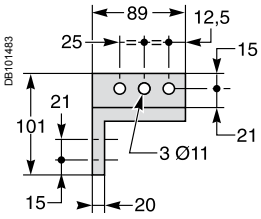

Horizontal rear connection NW08 to NW32

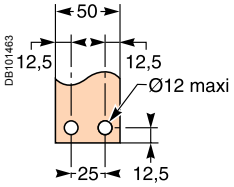

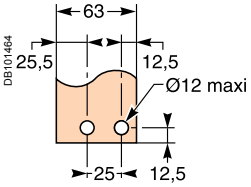

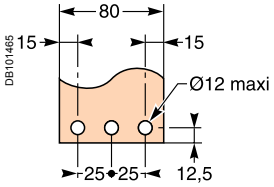

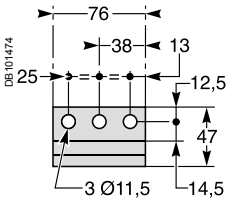

NW40b to NW50

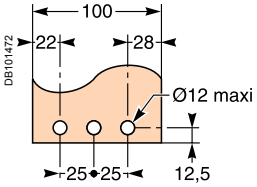

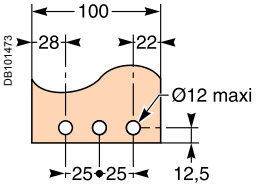

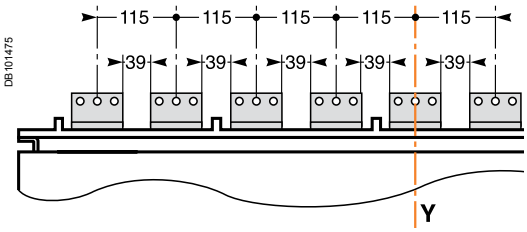

Vertical rear connection NW08 to NW32, NW40b to NW50

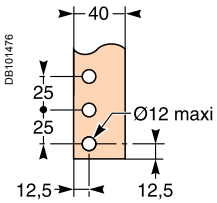

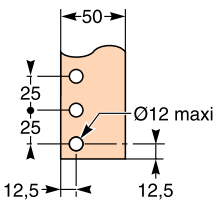

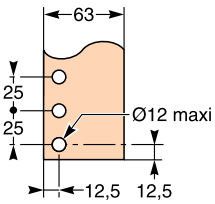

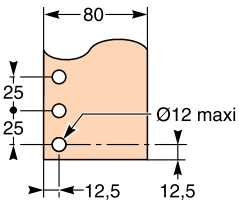

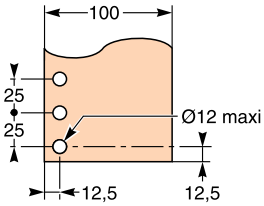

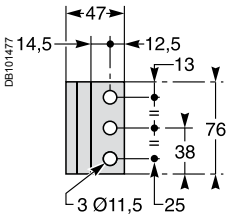

Front connection NW08 to NW32

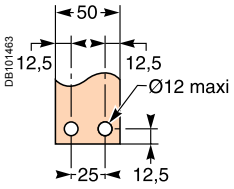

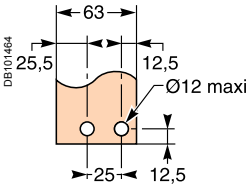

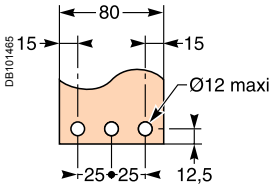

Top connection

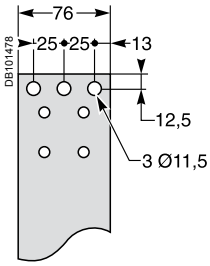

Bottom connection

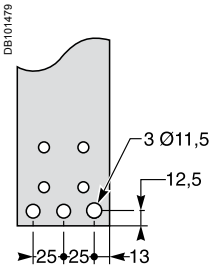

Busbar sizing

Basis of tables:
- maximum permissible busbars temperature: 100 °C
- Ti: temperature around the circuit breaker and its connection
- busbar material is unpainted copper.

Front or rear horizontal connection

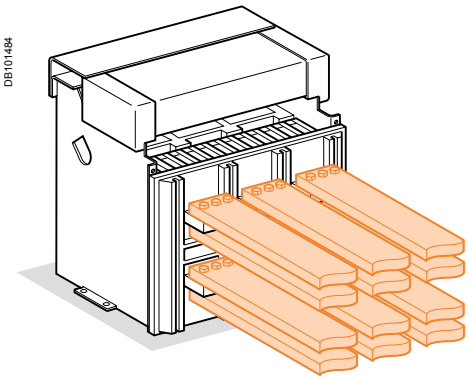

Masterpact	Maximum service current	Ti : 40 °C		Ti : 50 °C		Ti : 60 °C	
		No. of 5 mm thick bars	No. of 10 mm thick bars	No. of 5 mm thick bars	No. of 10 mm thick bars	No. of 5 mm thick bars	No. of 10 mm thick bars
NT06	400	2b.30 x 5	1b.30 x 10	2b.30 x 5	1b.30 x 10	2b.30 x 5	1b.30 x 10
NT06	630	2b.40 x 5	1b.40 x 10	2b.40 x 5	1b.40 x 10	2b.40 x 5	1b.40 x 10
NT08 ou NW08	800	2b.50 x 5	1b.50 x 10	2b.50 x 5	1b.50 x 10	2b.50 x 5	1b.63 x 10
NT10 ou NW10	1000	3b.50 x 5	1b.63 x 10	3b.50 x 5	2b.50 x 10	3b.63 x 5	2b.50 x 10
NT12 ou NW12	1250	3b.50 x 5	2b.40 x 10	3b.50 x 5	2b.50 x 10	3b.63 x 5	2b.50 x 10
		2b.80 x 5	2b.40 x 10	2b.80 x 5			
NT16 ou NW16	1400	3b.63 x 5	2b.40 x 10	3b.63 x 5	2b.50 x 10	3b.80 x 5	2b.63 x 10
NT16 ou NW16	1600	3b.80 x 5	2b.63 x 10	3b.80 x 5	2b.63 x 10	3b.80 x 5	3b.50 x 10
NW20	1800	3b.80 x 5	2b.63 x 10	3b.80 x 5	2b.63 x 10	3b.100 x 5	2b.80 x 10
NW20	2000	3b.100 x 5	2b.80 x 10	3b.100 x 5	2b.80 x 10	3b.100 x 5	3b.63 x 10
NW25	2200	4b.100 x 5	2b.80 x 10	4b.100 x 5	2b.80 x 10	4b.100 x 5	2b.100 x 10
NW25	2500	4b.100 x 5	2b.100 x 10	4b.100 x 5	2b.100 x 10	4b.100 x 5	3b.80 x 10
NW32	2800	4b.100 x 5	3b.80 x 10	4b.100 x 5	3b.80 x 10	5b.100 x 5	3b.100 x 10
NW32	3000	5b.100 x 5	3b.80 x 10	6b.100 x 5	3b.100 x 10	8b.100 x 5	4b.80 x 10
NW32	3200	6b.100 x 5	3b.100 x 10	8b.100 x 5	3b.100 x 10		4b.100 x 10
NW40	3800		4b.100 x 10		5b.100 x 10		5b.100 x 10
NW40	4000		5b.100 x 10		5b.100 x 10		6b.100 x 10
NW50	4500		6b.100 x 10		6b.100 x 10		7b.100 x 10
NW50	5000		7b.100 x 10		7b.100 x 10		

With Masterpact NT, it is recommanded to use 50 mm wideness bars (see "Recommended busbars drilling").

Example

Conditions:
- drawout version
- horizontal busbars
- T_i: 50 °C
- service current: 1800 A.

Solution:
For T_i = 50 °C, use an NW20 which can be connected with three 80 x 5 mm bars or two 63 x 10 mm bars.

Note: *the values indicated in these tables have been extrapolated from test data and theoretical calculations. These tables are only intended as a guide and cannot replace industrial experience or a temperature rise test.*

Basis of tables:
- maximum permissible busbars temperature: 100 °C
- Ti: temperature around the circuit breaker and its connection
- busbar material is unpainted copper.

Rear vertical connection

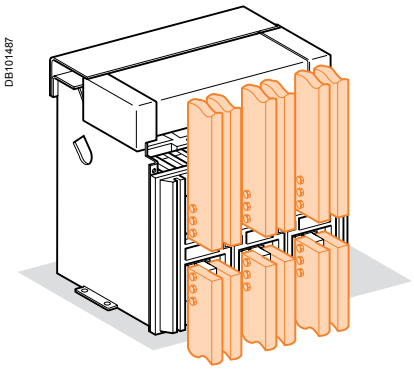

Masterpact	Maximum service current	Ti : 40 °C		Ti : 50 °C		Ti : 60 °C	
		No. of 5 mm thick bars	No. of 10 mm thick bars	No. of 5 mm thick bars	No. of 10 mm thick bars	No. of 5 mm thick bars	No. of 10 mm thick bars
NT06	400	2b.30 x 5	1b.30 x 10	2b.30 x 5	1b.30 x 10	2b.30 x 5	1b.30 x 10
NT06	630	2b.40 x 5	1b.40 x 10	2b.40 x 5	1b.40 x 10	2b.40 x 5	1b.40 x 10
NT08 ou NW08	800	2b.50 x 5	1b.50 x 10	2b.50 x 5	1b.50 x 10	2b.50 x 5	1b.50 x 10
NT10 ou NW10	1000	2b.50 x 5	1b.50 x 10	2b.50 x 5	1b.50 x 10	2b.63 x 5	1b.63 x 10
NT12 ou NW12	1250	2b.63 x 5	1b.63 x 10	3b.50 x 5	2b.40 x 10	3b.50 x 5	2b.40 x 10
NT16 ou NW16	1400	2b.80 x 5	1b.80 x 10	2b.80 x 5	2b.50 x 10	3b.63 x 5	2b.50 x 10
NT16 ou NW16	1600	3b.63 x 5	2b.50 x 10	3b.63 x 5	2b.50 x 10	3b.80 x 5	2b.63 x 10
NW20	1800	2b.100 x 5	1b.80 x 10	2b.100 x 5	2b.50 x 10	3b.80 x 5	2b.63 x 10
NW20	2000	3b.100 x 5	2b.63 x 10	3b.100 x 5	2b.63 x 10	3b.100 x 5	2b.80 x 10
NW25	2200	3b.100 x 5	2b.63 x 10	3b.100 x 5	2b.63 x 10	3b.100 x 5	2b.80 x 10
NW25	2500	4b.100 x 5	2b.80 x 10	4b.100 x 5	2b.80 x 10	4b.100 x 5	3b.80 x 10
NW32	2800	4b.100 x 5	2b.100 x 10	4b.100 x 5	2b.100 x 10	4b.100 x 5	3b.80 x 10
NW32	3000	5b.100 x 5	3b.80 x 10	6b.100 x 5	3b.100 x 10	5b.100 x 5	4b.80 x 10
NW32	3200	6b.100 x 5	3b.100 x 10	6b.100 x 5	3b.100 x 10		4b.100 x 10
NW40	3800		4b.100 x 10		4b.100 x 10		4b.100 x 10
NW40	4000		4b.100 x 10		4b.100 x 10		4b.100 x 10
NW50	4500		5b.100 x 10		5b.100 x 10		6b.100 x 10
NW50	5000		5b.100 x 10		6b.100 x 10		7b.100 x 10
NW63	5700		7b.100 x 10		7b.100 x 10		8b.100 x 10
NW63	6300		8b.100 x 10		8b.100 x 10		

Example

Conditions:
- drawout version
- vertical connections
- T_i: 40 °C
- service current: 1100 A.

Solution :
For T_i = 40 °C use an NT12 or NW12 which can be connected with two 63 x 5 mm bars or with one 63 x 10 mm bar.

Note: *the values indicated in these tables have been extrapolated from test data and theoretical calculations. These tables are only intended as a guide and cannot replace industrial experience or a temperature rise test.*

Temperature derating Power dissipation and input / output resistance

Temperature derating

The table below indicates the maximum current rating, for each connection type, as a function of Ti around the circuit breaker and the busbars.
Circuit breakers with mixed connections have the same derating as horizontally connected breakers.
For Ti greater than 60 °C, consult us.
Ti: temperature around the circuit breaker and its connection.

Version	Drawout										Fixed									
Connection	Front or rear horizontal					Rear vertical					Front or rear horizontal					Rear vertical				
Temp. Ti	40	45	50	55	60	40	45	50	55	60	40	45	50	55	60	40	45	50	55	60
NT06 H1/H2/L1	630					630					630					630				
NT08 H1/H2/L1	800					800					800					800				
NT10 H1/H2/L1	1000					1000					1000					1000				
NT12 H1/H2	1250					1250					1250					1250				
NT16 H1/H2	1600		1520	1480	1430	1600			1560	1510	1600				1550	1600				
NW08 N/H/L	800					800					800					800				
NW10 N/H/L	1000					1000					1000					1000				
NW12 N/H/L	1250					1250					1250					1250				
NW16 N/H/L	1600					1600					1600					1600				
NW20 H1/H2/H3	2000			1980	1890	2000					2000				1920	2000				
NW20 L1	2000		1900	1850	1800	2000					–	–	–	–	–	–	–	–	–	–
NW25 H1/H2/H3	2500					2500					2500					2500				
NW32 H1/H2/H3	3200		3100	3000	2900	3200					3200					3200				
NW40 H1/H2/H3	4000		3900	3750	3650	4000				3850	4000			3900	3800	4000				
NW40b H1/H2	4000					4000					4000					4000				
NW50 H1/H2	5000					5000					5000					5000				
NW63 H1/H2	–	–	–	–	–	6300				6200	–	–	–	–	–	6300				

Power dissipation and input / output resistance

Total power dissipation is the value measured at I_N, 50/60 Hz, for a 3 pole or 4 pole breaker (values above the power $P = 3RI^2$).
The resistance between input / output is the value measured per pole (cold state).

Version	Drawout		Fixed	
	Power dissipation (Watts)	Input/output resistance (µohm)	Power dissipation (Watts)	Input/output resistance (µohm)
NT06 H1/H2/L1	55/115 (H1/L1)	38/72	30/45	26/39
NT08 H1/H2/L1	90/140 (H1/L1)	38/72	50/80	26/39
NT10 H1/H2/L1	150/230 (H1/L1)	38/72	80/110	26/39
NT12 H1/H2	250	36	130	26
NT16 H1/H2	460	36	220	26
NW08 N1	137	42	62	19
NW08 H/L	100	30	42	13
NW10 N1	220	42	100	19
NW10 H/L	150	30	70	13
NW12 N1	330	42	150	19
NW12 H/L	230	27	100	13
NW16 N1	480	37	220	19
NW16 H/L	390	27	170	13
NW20 H/L	470	27	250	13
NW25 H1/H2/H3	600	19	260	8
NW32 H1/H2/H3	670	13	420	8
NW40 H1/H2/H3	900	11	650	8
NW40b H1/H2	550	7	390	5
NW50 H1/H2	950	7	660	5
NW63 H1/H2	1200	7	1050	5

Factors affecting switchboard design

The temperature around the circuit breaker and its connections:
This is used to define the type of circuit breaker to be used and its connection arrangement.

Vents at the top and bottom of the cubicles:
Vents considerably reduce the temperature inside the switchboard, but must be designed so as to respect the degree of protection provided by the enclosure.
For weatherproof heavy-duty cubicles, a forced ventilation system may be required.

The heat dissipated by the devices installed in the switchboard:
This is the heat dissipated by the circuit breakers under normal conditions (service current).

The size of the enclosure:
This determines the volume for cooling calculations.

Switchboard installation mode:
Free-standing, against a wall, etc.

Horizontal partitions:
Partitions can obstruct air circulation within the enclosure.

Basis of tables

- switchboard dimensions
- number of circuit-breakers installed
- type of breaker connections
- drawout versions
- ambient temperature outside of the switchboard: T_a (IEC 60439-1).

Masterpact NT06-16 H1/H2/L1 (switchboard 2000 x 400 x 400) - area of outlet vents: 150 cm²

Type		NT06 H1/H2/L1		NT08 H1/H2/L1		NT10 H1/H2/L1		NT12 H1/H2		NT16 H1/H2	
Switchboard composition											
Connection type		≡	|||	≡	|||	≡	|||	≡	|||	≡	|||
Busbar dimensions (mm)		2b. 40 x 5		2b. 50 x 5		3b. 63 x 5		3b. 63 x 5	3b. 50 x 5	3b. 80 x 5	3b. 63 x 5
Ventilated switchboard (➨ IP31)											
	4					H1/L1	H1/L1				
	3	630	630	800	800	1000/1000	1000/1000	1250	1250	1400	1520
	2										
	1										
T_a = 35 °C	**4**										
	3	630	630	800	800	1000/950	1000/1000	1250	1250	1330	1440
	2										
	1										
T_a = 45 °C	**4**										
	3	630	630	800	800	1000/890	1000/960	1200	1250	1250	1340
	2										
	1										
T_a = 55 °C	**4**										
Non ventilated switchboard (➨ IP54)	**3**	630	630	800	800	1000/960	1000/1000	1250	1250	1330	1400
	2										
	1										
T_a = 35 °C	**4**										
	3	630	630	800	800	1000/910	1000/980	1220	1250	1260	1330
	2										
	1										
T_a = 45 °C	**4**										
	3	630	630	800	800	1000/860	1000/930	1150	1230	1200	1260
	2										
	1										
T_a = 55 °C											

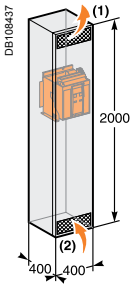

(1) Area of outlet vents: 150 cm².
(2) Area of intlet vents: 150 cm².

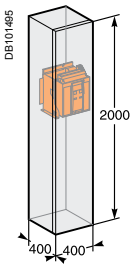

***Note:** the values indicated in these tables have been extrapolated from test data and theoretical calculations. These tables are only intended as a guide and cannot replace industrial experience or a temperature rise test.*
The values indicated for the cross-sectional area of the vents should be considered as general indications only given that the thermal performance of a switchboard with natural ventilation depends on many parameters, e.g. shape, porosity and location of vents and air flow within the switchboard.

Derating in switchboards

Masterpact NT06-08 H1/H2/L1 (switchboard 2300 x 1100 x 500) - area of outlet vents: 300 cm²

Type		NT06 H1/H2/L1						NT08 H1/H2/L1				
Switchboard composition												
Connection type												
Busbar dimensions (mm)		2b. 40 x 5						2b. 50 x 5				
Ventilated switchboard (➨ IP31)												
	T_a = 35 °C											
	5					630	630					800
	4				630	630	630				800	800
	3			630	630	630	630			800	800	800
	2	630	630	630	630	630	630	800	800	800	800	800
	1						630					
	T_a = 45 °C											
	5					630	630					800
	4				630	630	630				800	800
	3			630	630	630	630			800	800	800
	2	630	630	630	630	630	630	800	800	800	800	800
	1						630					
	T_a = 55 °C											
	5					630	630					800
	4				630	630	630				800	800
	3			630	630	630	630			800	800	800
	2	630	630	630	630	630	630	800	800	800	800	800
	1						630					
Non ventilated switchboard (➨ IP54)												
	T_a = 35 °C											
	5					630	630					800
	4				630	630	630				800	800
	3			630	630	630	630			800	800	800
	2	630	630	630	630	630	630	800	800	800	800	800
	1						630					
	T_a = 45 °C											
	5					630	630					800
	4				630	630	630				800	800
	3			630	630	630	630			800	800	800
	2	630	630	630	630	630	630	800	800	800	800	800
	1						630					
	T_a = 55 °C											
	5					630	630					800
	4				630	630	630				800	800
	3			630	630	630	630			800	800	800
	2	630	630	630	630	630	630	800	800	800	800	800
	1						630					

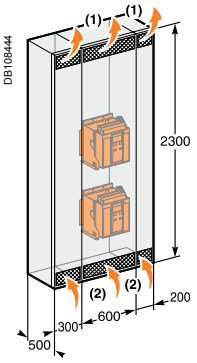

(1) Area of outlet vents: 300 cm².
(2) Area of intlet vents: 300 cm².

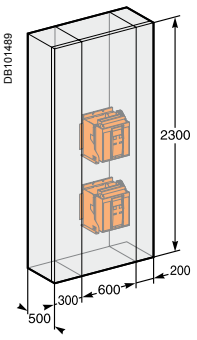

***Note:** the values indicated in these tables have been extrapolated from test data and theoretical calculations. These tables are only intended as a guide and cannot replace industrial experience or a temperature rise test.*
The values indicated for the cross-sectional area of the vents should be considered as general indications only given that the thermal performance of a switchboard with natural ventilation depends on many parameters, e.g. shape, porosity and location of vents and air flow within the switchboard.

Masterpact NT10-16 H1/H2/L1 (switchboard 2300 x 1100 x 500) - area of outlet vents: 300 cm²

Type		NT10 H1/H2/L1				NT12 H1/H2				NT16 H1/H2		
Switchboard composition												
Connection type		≡	|||	|||	|||	≡	|||	|||	≡	|||	|||
Busbar dimensions (mm)		3b. 63 x 5	2b. 63 x 5			3b. 63 x 5	3b. 50 x 5			3b. 80 x 5	3b. 63 x 5	
Ventilated switchboard (➨ IP31)	**5**	H1/L1	H1/L1	H1/L1	H1/L1							
	4				1000/1000				1250			
	3			1000/1000	1000/1000			1250	1250			1500
T_a = 35 °C	**2**	1000/1000	1000/1000	1000/1000	1000/1000	1250	1250	1250	1250	1460	1600	1550
	1											
	5											
	4				1000/1000				1250			
	3			1000/1000	1000/1000			1250	1250			1420
T_a = 45 °C	**2**	1000/960	1000/1000	1000/1000	1000/1000	1250	1250	1250	1250	1400	1500	1480
	1											
	5											
	4				1000/920				1250			
	3			1000/950	1000/930			1250	1250			1330
T_a = 55 °C	**2**	1000/900	1000/1000	1000/970	1000/950	1250	1250	1250	1250	1300	1400	1370
	1											
Non ventilated switchboard (➨ IP54)	**5**											
	4				1000/950				1250			
	3			1000/1000	1000/960			1250	1250			1370
T_a = 35 °C	**2**	1000/1000	1000/1000	1000/1000	1000/970	1250	1250	1250	1250	1400	1500	1400
	5											
	4				1000/900				1180			
	3			1000/950	1000/910			1250	1190			1300
T_a = 45 °C	**2**	1000/950	1000/1000	1000/960	1000/930	1250	1250	1250	1220	1350	1430	1320
	5											
	4				1000/850				1120			
	3			1000/900	1000/860			1200	1130			1210
T_a = 55 °C	**2**	1000/880	1000/970	1000/910	1000/870	1210	1250	1210	1150	1250	1350	1250

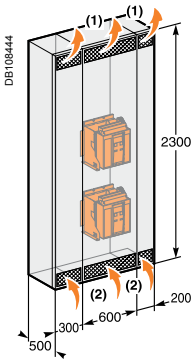

(1) Area of outlet vents: 300 cm².
(2) Area of intlet vents: 300 cm².

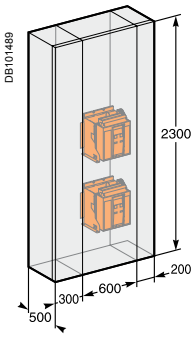

***Note:** the values indicated in these tables have been extrapolated from test data and theoretical calculations. These tables are only intended as a guide and cannot replace industrial experience or a temperature rise test.*
The values indicated for the cross-sectional area of the vents should be considered as general indications only given that the thermal performance of a switchboard with natural ventilation depends on many parameters, e.g. shape, porosity and location of vents and air flow within the switchboard.

Derating in switchboards

Masterpact NW08-10 N/H/L (switchboard 2300 x 800 x 900) - area of outlet vents: 350 cm²

Type		NW08 N/H/L					NW10 N/H/L			
Switchboard composition										
Connection type										
Busbar dimensions (mm)		2b. 50 x 5					3b. 63 x 5	2b. 63 x 5		
Ventilated switchboard (➨ IP31)										
	4					800				
	3				800	800				1000
T_a = 35 °C	**2**			800	800	800			1000	1000
	1	800	800	800	800	800	1000	1000	1000	1000
	4					800				
	3				800	800				1000
T_a = 45 °C	**2**			800	800	800			1000	1000
	1	800	800	800	800	800	1000	1000	1000	1000
	4					800				
	3				800	800				1000
T_a = 55 °C	**2**			800	800	800			1000	1000
	1	800	800	800	800	800	1000	1000	1000	1000

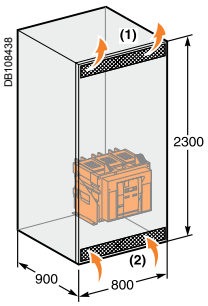

(1) Area of outlet vents: 350 cm².
(2) Area of intlet vents: 350 cm².

Non ventilated switchboard (➨ IP54)	**4**					800				
	3				800	800				1000
T_a = 35 °C	**2**			800	800	800			1000	1000
	1	800	800	800	800	800	1000	1000	1000	1000
	4					800				
	3				800	800				1000
T_a = 45 °C	**2**			800	800	800			1000	1000
	1	800	800	800	800	800	1000	1000	1000	1000
	4					800				
	3				800	800				1000
T_a = 55 °C	**2**			800	800	800			1000	1000
	1	800	800	800	800	800	1000	1000	1000	1000

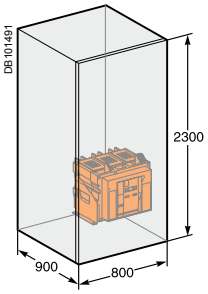

Note: *the values indicated in these tables have been extrapolated from test data and theoretical calculations. These tables are only intended as a guide and cannot replace industrial experience or a temperature rise test.*
The values indicated for the cross-sectional area of the vents should be considered as general indications only given that the thermal performance of a switchboard with natural ventilation depends on many parameters, e.g. shape, porosity and location of vents and air flow within the switchboard.

Masterpact NW12-16 N/H/L (switchboard 2300 x 800 x 900) - area of outlet vents: 350 cm²

Type		NW12 N1				NW12 H/L				NW16 N1			NW16 H/L		
Switchboard composition															
Connection type															
Busbar dimensions (mm)		3b. 63 x 5				3b. 63 x 5				3b. 80 x 5			3b. 80 x 5		
			3b. 50 x 5				3b. 50 x 5				3b. 63 x 5			3b. 63 x 5	
Ventilated switchboard (➨ IP31)	4														
	3				1250				1250						
T_a = 35 °C	2			1250	1250			1250	1250			1600			1600
	1	1250	1250	1250	1250	1250	1250	1250	1250	1550	1600	1600	1600	1600	1600
	4														
	3				1250				1250						
T_a = 45 °C	2			1250	1250			1250	1250			1500			1600
	1	1250	1250	1250	1250	1250	1250	1250	1250	1470	1600	1600	1600	1600	1600
	4														
	3				1250				1250						
T_a = 55 °C	2			1250	1250			1250	1250			1380			1470
	1	1250	1250	1250	1250	1250	1250	1250	1250	1380	1500	1500	1520	1600	1600

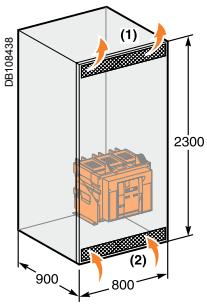

(1) Area of outlet vents: 350 cm².
(2) Area of intlet vents: 350 cm².

Non ventilated switchboard (➨ IP54)	4														
	3				1240				1250						
T_a = 35 °C	2			1250	1250			1250	1250			1425			1600
	1	1250	1250	1250	1250	1250	1250	1250	1250	1440	1550	1550	1600	1600	1600
	4														
	3				1170				1250						
T_a = 45 °C	2			1210	1210			1250	1250			1360			1500
	1	1200	1250	1250	1250	1250	1250	1250	1250	1360	1470	1470	1500	1600	1600
	4														
	3				1100				1250						
T_a = 55 °C	2			1140	1170			1250	1250			1280			1400
	1	1130	1200	1200	1200	1250	1250	1250	1250	1280	1380	1380	1400	1520	1520

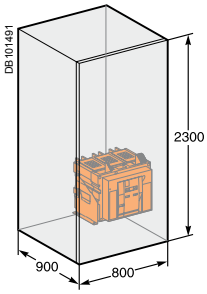

***Note:** the values indicated in these tables have been extrapolated from test data and theoretical calculations. These tables are only intended as a guide and cannot replace industrial experience or a temperature rise test.*
The values indicated for the cross-sectional area of the vents should be considered as general indications only given that the thermal performance of a switchboard with natural ventilation depends on many parameters, e.g. shape, porosity and location of vents and air flow within the switchboard.

Derating in switchboards

Masterpact NW20-40 N/H/L (switchboard 2300 x 800 x 900) - area of outlet vents: 350 cm²

Type		NW20 H1/H2/H3			NW20 L1			NW25 H1/2/3		NW32 H1/2/3		NW40 H1/2/3	
Switchboard composition													
Connection type													
Busbar dimensions (mm)		3b. 100 x 5			3b. 100 x 5			4b. 100 x 5		3b. 100 x 10		4b. 100 x 10	
Ventilated switchboard (➨ IP31)													
	4												
	3			2000			1830						
T_a = 35 °C	**2**	2000	2000	2000	2000	2000	2000	2375	2500	3040	3200	3320	3700
	1												
	4												
	3			2000			1750						
T_a = 45 °C	**2**	2000	2000	2000	1810	1960	1920	2250	2380	2880	3100	3160	3500
	1												
	4												
	3			2000			1640						
T_a = 55 °C	**2**	2000	2000	2000	1700	1850	1800	2100	2250	2690	2900	2960	3280
	1												

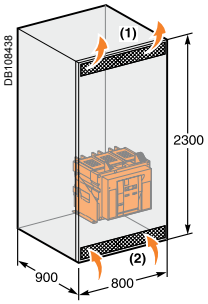

(1) Area of outlet vents: 350 cm².
(2) Area of intlet vents: 350 cm².

Non ventilated switchboard (➨ IP54)	**4**												
	3			2000			1750						
T_a = 35 °C	**2**	2000	2000	2000	1800	1900	1890	2125	2275	2650	2850	3040	3320
	1												
	4												
	3			1900			1660						
T_a = 45 °C	**2**	1900	1960	1960	1680	1810	1800	2000	2150	2550	2700	2880	3120
	1												
	4												
	3			1780			1550						
T_a = 55 °C	**2**	1800	1920	1920	1590	1700	1700	1900	2020	2370	2530	2720	2960
	1												

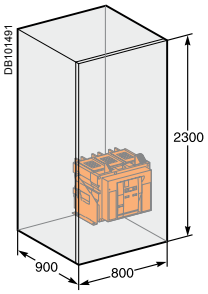

Note: *the values indicated in these tables have been extrapolated from test data and theoretical calculations. These tables are only intended as a guide and cannot replace industrial experience or a temperature rise test.*
The values indicated for the cross-sectional area of the vents should be considered as general indications only given that the thermal performance of a switchboard with natural ventilation depends on many parameters, e.g. shape, porosity and location of vents and air flow within the switchboard.

Masterpact NW40b-63 H1/H2 (switchboard 2300 x 1400 x 1500) - area of outlet vents: 500 cm²

Type		NW40b H1/H2		NW50 H1/H2		NW63 H1/H2
Switchboard composition						
Connection type						
Busbar dimensions (mm)		5b. 100 x 10		7b. 100 x 10		8b. 100 x 10
Ventilated switchboard (➨ IP31)						
	4					
	3					
T_a = 35 °C	**2**	4000	4000	4700	5000	5850
	1					
	4					
	3					
T_a = 45 °C	**2**	4000	4000	4450	4850	5670
	1					
	4					
	3					
T_a = 55 °C	**2**	4000	4000	4200	4600	5350
	1					

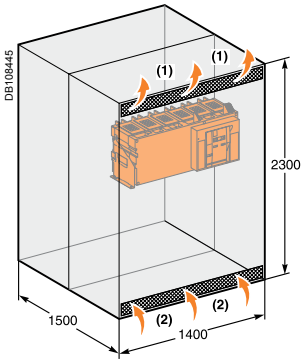

(1) Area of outlet vents: 500 cm².
(2) Area of intlet vents: 500 cm².

Non ventilated switchboard (➨ IP54)						
	4					
	3					
T_a = 35 °C	**2**	4000	4000	4350	4650	5290
	1					
	4					
	3					
T_a = 45 °C	**2**	4000	4000	4100	4400	5040
	1					
	4					
	3					
T_a = 55 °C	**2**	3840	3840	3850	4150	4730
	1					

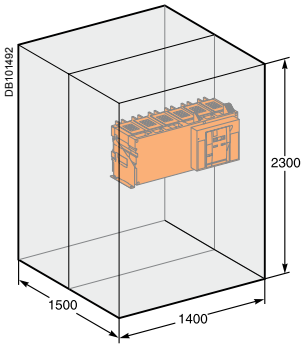

Note: *the values indicated in these tables have been extrapolated from test data and theoretical calculations. These tables are only intended as a guide and cannot replace industrial experience or a temperature rise test.*
The values indicated for the cross-sectional area of the vents should be considered as general indications only given that the thermal performance of a switchboard with natural ventilation depends on many parameters, e.g. shape, porosity and location of vents and air flow within the switchboard.

Substitution kit

Fixed / drawout devices 800 to 3200 A

It is possible to replace a **Masterpact (M08 to M32)** with a new **Masterpact (NW08 to NW32)** with the same power rating.
Substitution is possible for the following types of circuit breakers:
- N1, H1, H2 for both fixed and drawout versions
- L1 for drawout versions up to 2000 A.

Mounting diagram

Fixed version

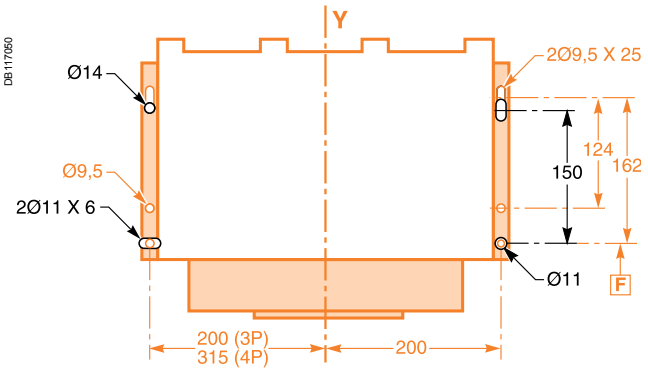

Drawout version

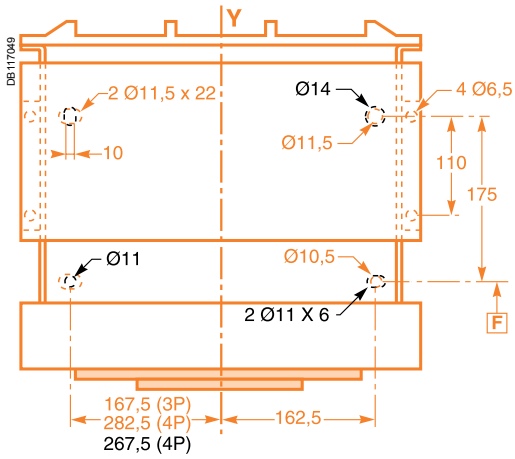

: Masterpact NW
: Masterpact M

Fixing points are identical for Masterpact (M08 to M32) and Masterpact (NW08 to NW32), except for the four-pole chassis.

Door cut-out

- without an escutcheon, the cut-out is identical (270 x 325 mm)
- with the former escutcheon, the cut-out is identical (270 x 325 mm)
- with the new escutcheon, the cut-out is different.

Fixed version

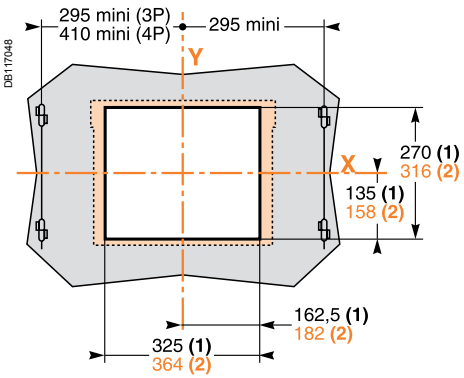

Drawout version

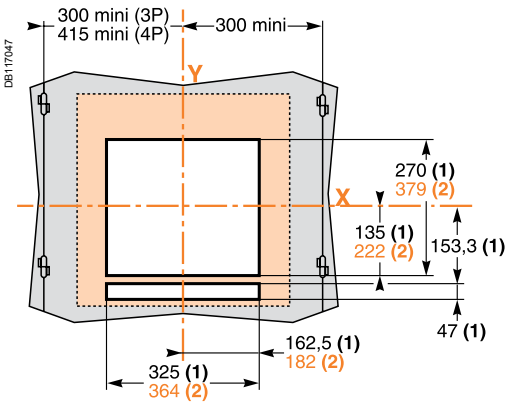

Power connection

Select a set of retrofit connectors to replace the standard connectors and avoid any modifications to the busbars (see the retrofit section in “orders and quotations”).

Note:
(1) Without escutcheon.
(2) With escutcheon.

*References **X** and **Y** represent the symmetry planes for three-pole devices.*

Electrical diagrams

Correspondences between Masterpact NW and Masterpact M terminal blocks.

Power

Control unit

Remote operation

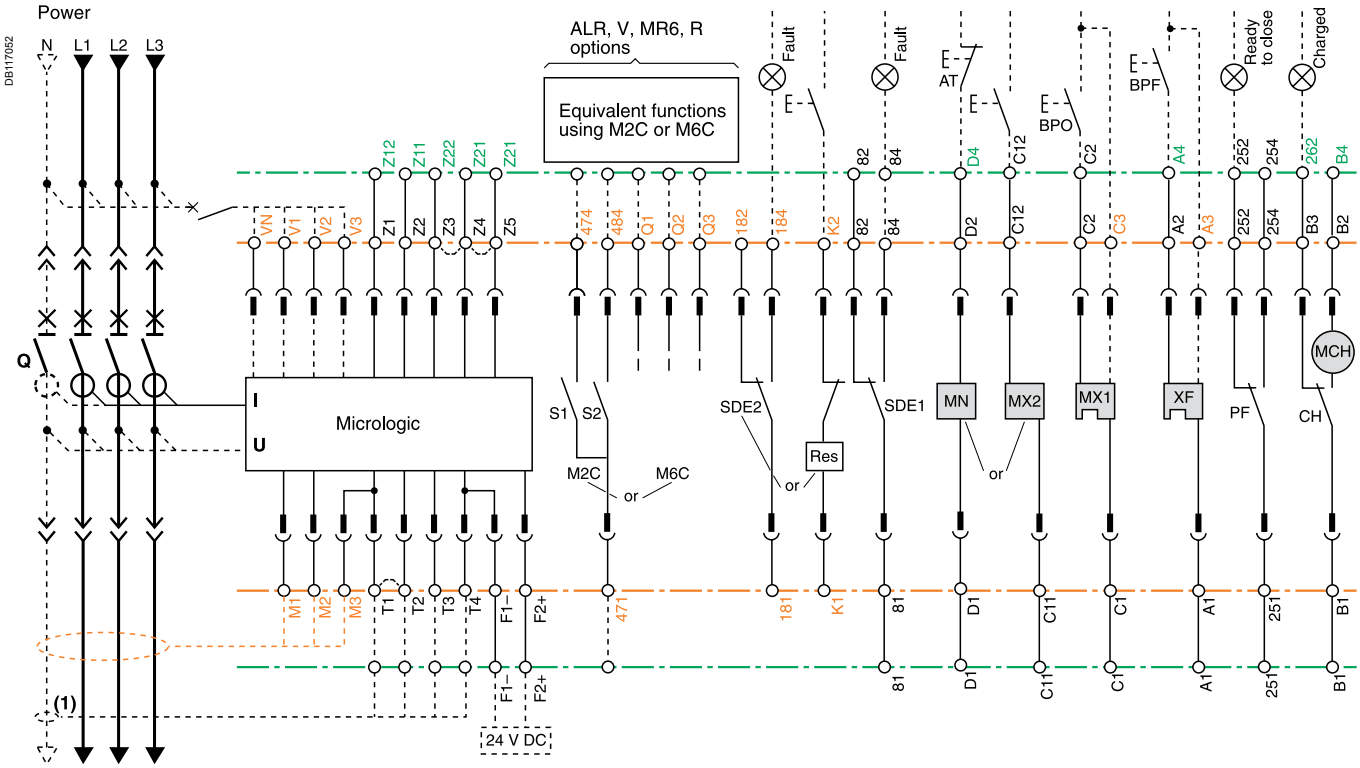

Indication contacts

Chassis contacts

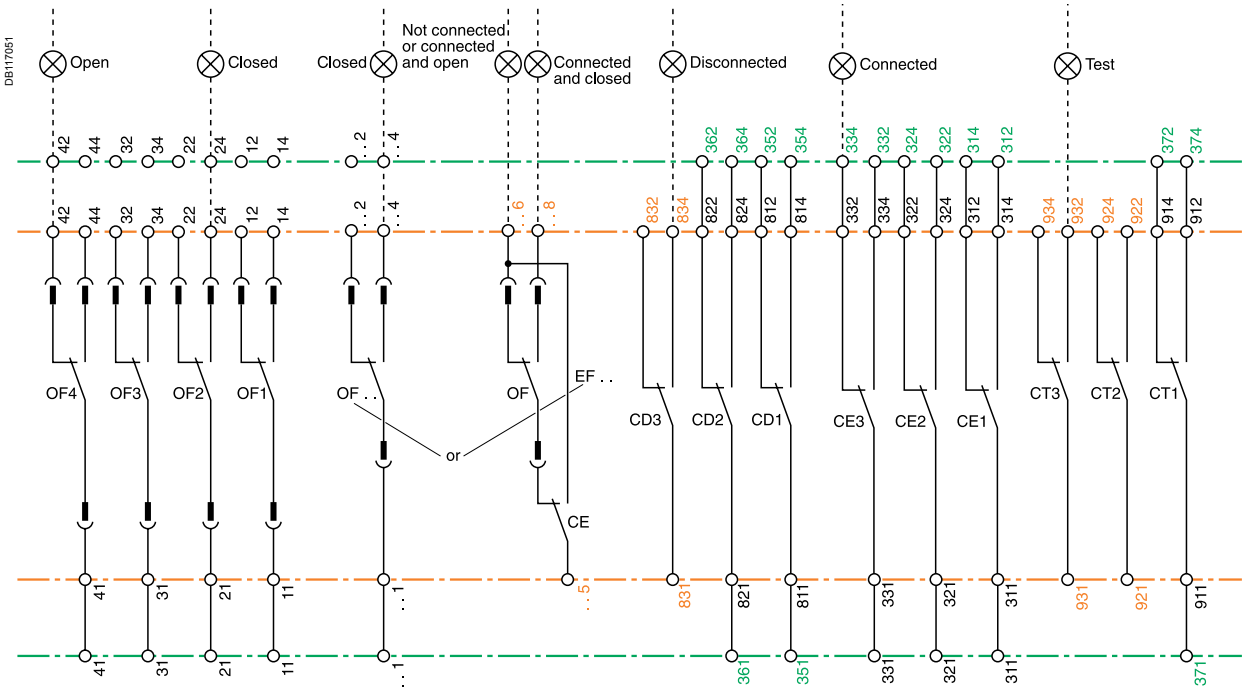

Identical to Masterpact M.

Different than Masterpact M.

New or additional functions.

(1) The current transformer for the external neutral must be replaced.

TOOLS

schneider-electric.com

This international site allows you to access all the Schneider Electric products in just 2 clicks via comprehensive range data-sheets, with direct links to:

- complete library: technical documents, catalogs, FAQs, brochures…
- selection guides from the e-catalog.
- product discovery sites and their Flash animations.

You will also find illustrated overviews, news to which you can subscribe, the list of country contacts…

Training

Training allows you to acquire the Schneider Electric expertise (installation design, work with power on, etc.) for increased efficiency and a guarantee of improved customer service.
The training catalogue includes beginner's courses in electrical distribution, knowledge of MV and LV switchgear, operation and maintenance of installations, design of LV installations to give but a few examples.

Dimensions and connection

Presentation *3*
Functions and characteristics *A-1*
Installation recommendations *B-1*

NT06 to NT16 circuit breakers
Fixed 3/4-poles device C-2
Drawout 3/4-poles device C-6

NW08 to NW32 circuit breakers
Fixed 3/4-poles device C-10
Drawout 3/4-poles device C-12

NW40 circuit breakers
Fixed 3/4-poles device C-14
Drawout 3/4-poles device C-16

NW40b to NW63 circuit breakers
Fixed 3/4-poles device C-18
Drawout 3/4-poles device C-20

NT/NW accessories C-22

NT/NW external modules C-24

Electrical diagrams *D-1*
Additional characteristics *E-1*
Catalogue numbers and order form *F-1*

NT06 to NT16 circuit breakers
Fixed 3/4-poles device

Dimensions

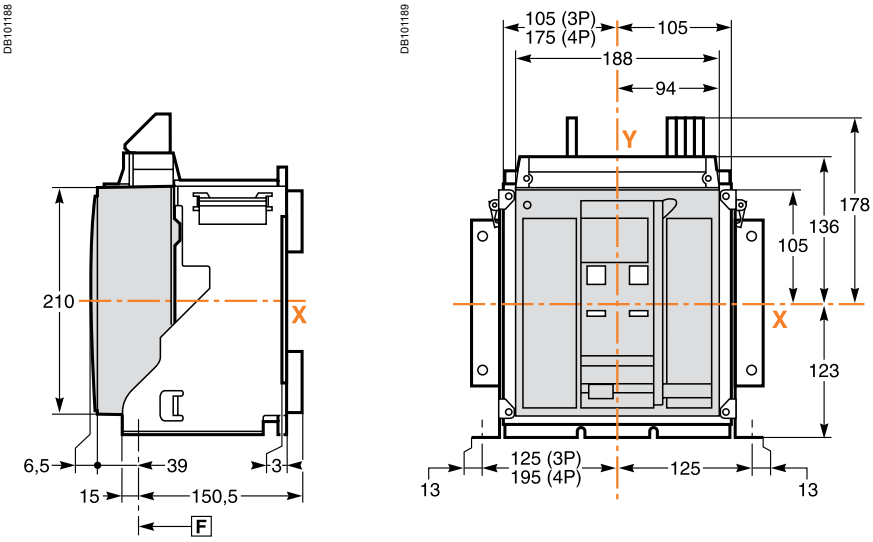

Bottom mounting (on base plate or rails)

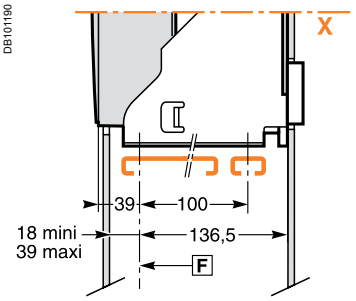

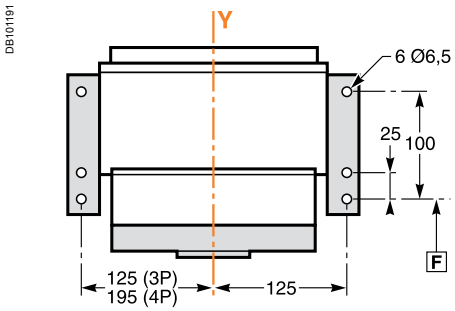

Rear mounting detail (on upright or backplate)

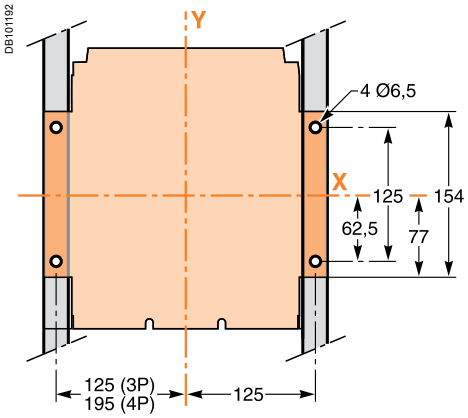

Safety clearances

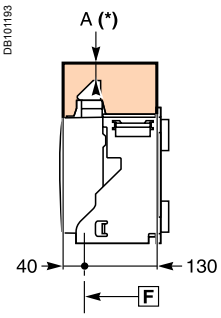

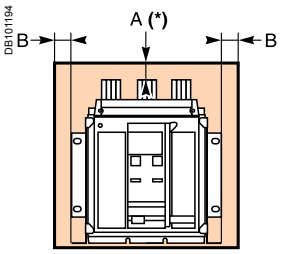

Door cutout

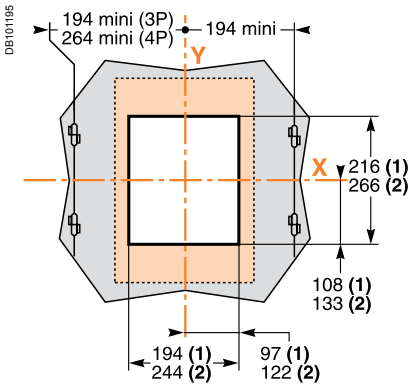

Rear panel cutout

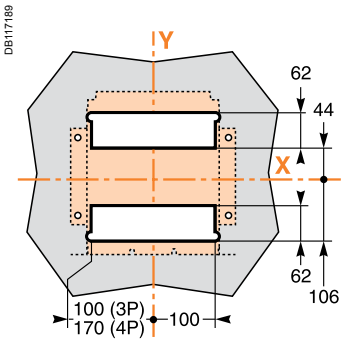

For voltages < 690 V

	Parts		
	Insulated	Metal	Energised
A	0	0	100
B	0	0	60

F : datum.

(1) Without escutcheon.
(2) With escutcheon.

Note: X and Y are the symmetry planes for a 3-pole device.
A(*) An overhead clearance of 50 mm is required to remove the arc chutes.
An overhead clearance of 20 mm is required to remove the terminal block.

Connections

Horizontal rear connection

DB101197

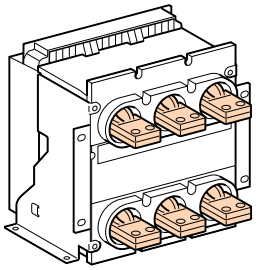

DB101198

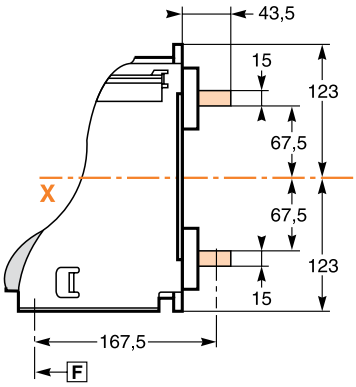

Detail

DB101199

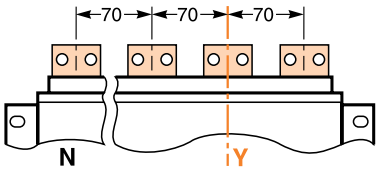

DB101200

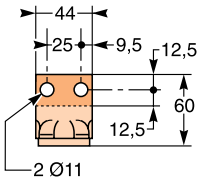

Vertical rear connection

DB101201

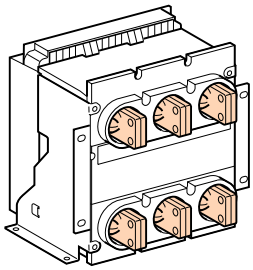

DB101202

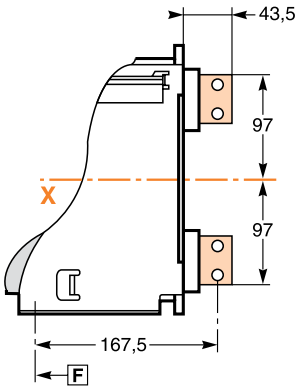

Detail

DB101230

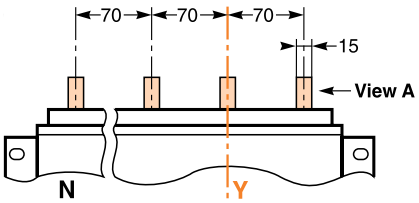

DB101204

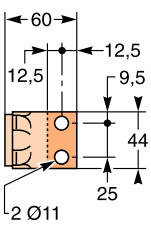

View A detail.

Front connection

DB101205

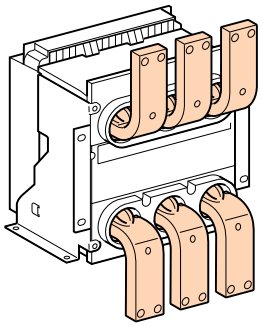

DB101206

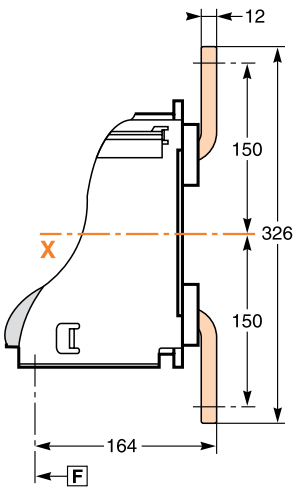

Detail

DB101231

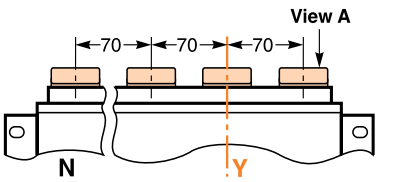

Top connection

DB101208

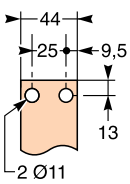

View A detail.

Bottom connection

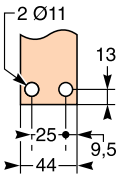

Note: *recommended connection screws:* ***M10*** *class 8.8.*
Tightening torque: ***50 Nm*** *with contact washer.*

NT06 to NT16 circuit breakers
Fixed 3/4-poles device

Connections

Front connection with spreaders

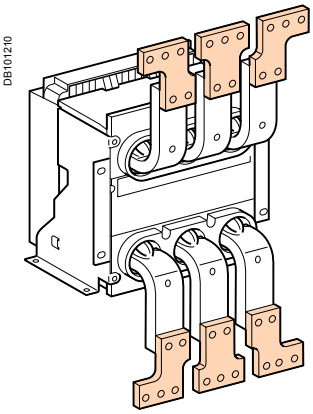

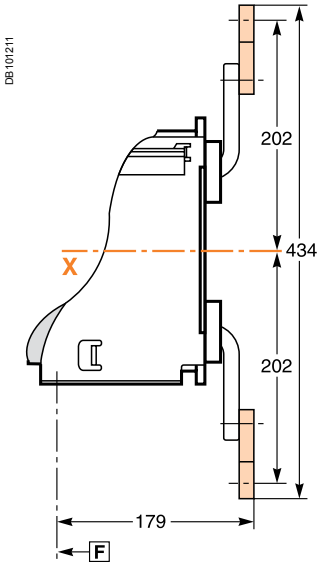

Detail

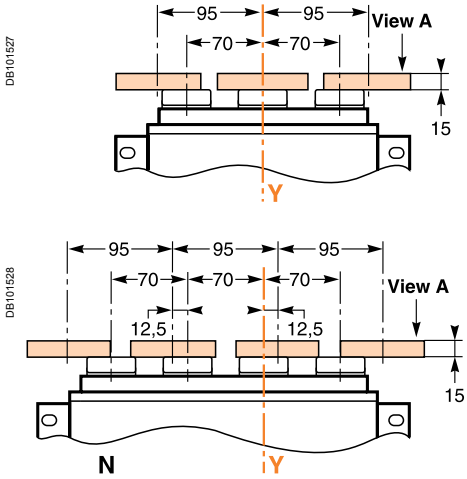

Rear connection with spreaders

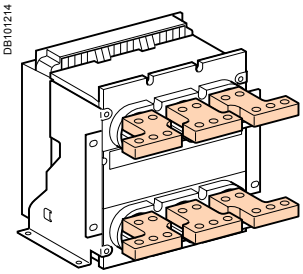

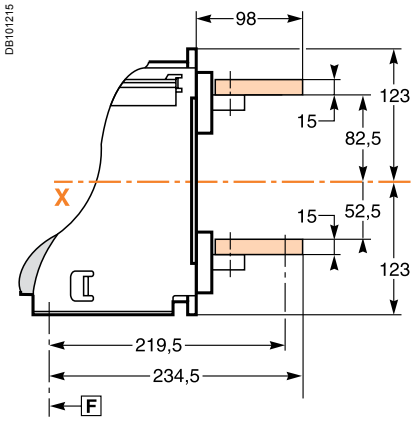

Detail

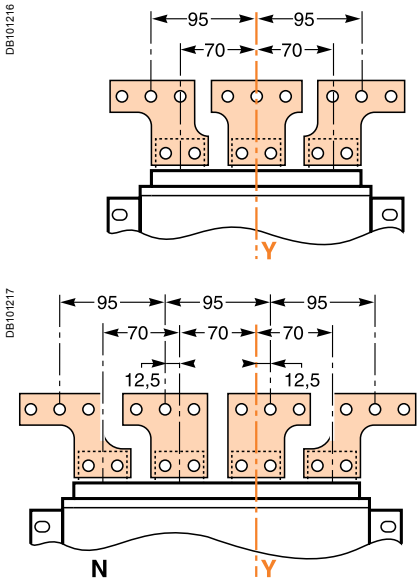

Spreader detail

Middle left or middle right spreader for 4P.

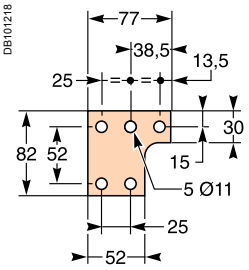

Middle spreader for 3P.

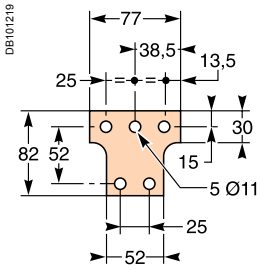

Left or right spreader for 4P.

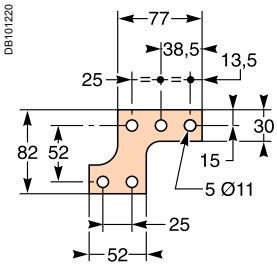

Left or right spreader for 3P.

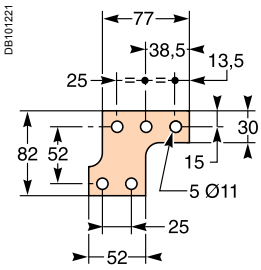

View A detail.

F : *datum.*

***Note:** X and Y are the symmetry planes for a 3-pole device.*

Connections

Front connection via vertical connection adapters

DB101222

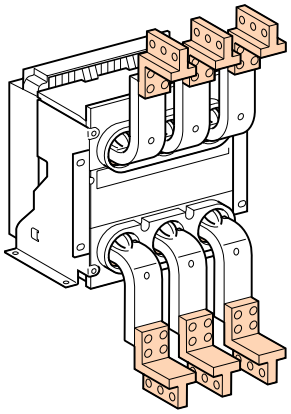

DB101223

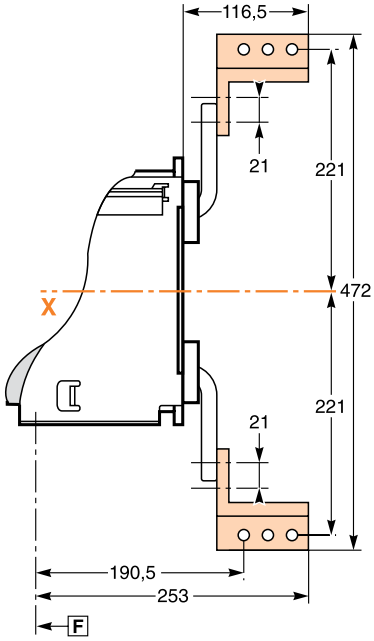

Detail

DB101232

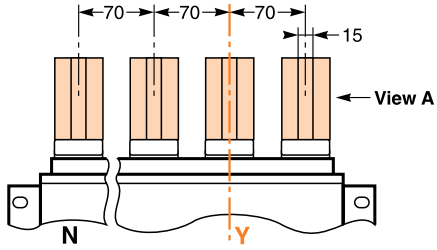

DB101225

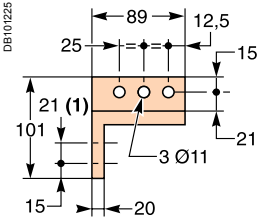

View A detail.

Front connection via vertical connection adapters fitted with cable-lug adapters

DB101226

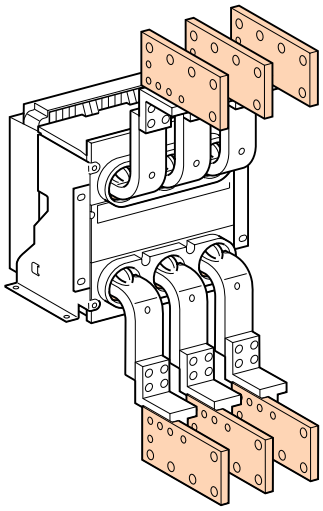

DB101227

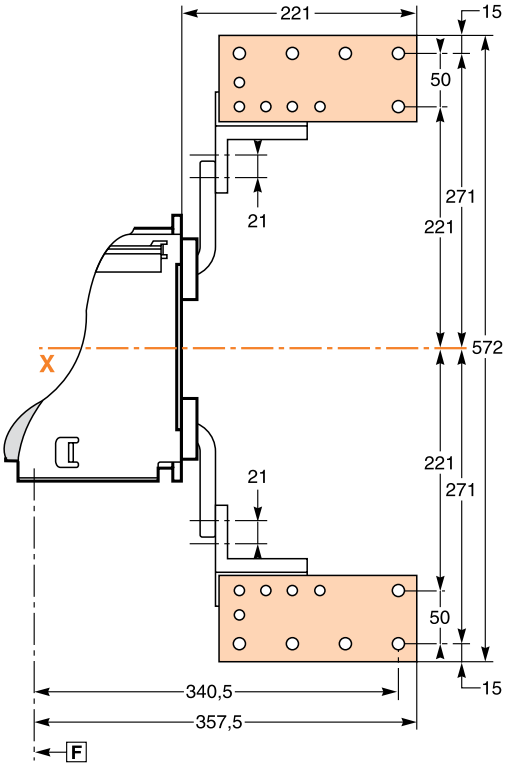

Detail

DB101233

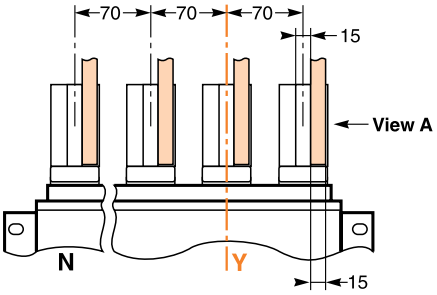

DB101229

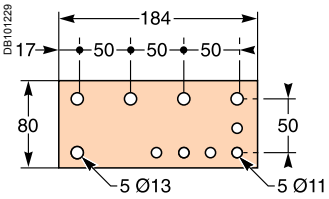

View A detail.

Note: *recommended connection screws:* ***M10*** *class 8.8.*
Tightening torque: ***50 Nm*** *with contact washer.*

(1) *2 connection possibilities on vertical connection adapters (21 mm between centres).*

NT06 to NT16 circuit breakers
Drawout 3/4-poles device

Dimensions

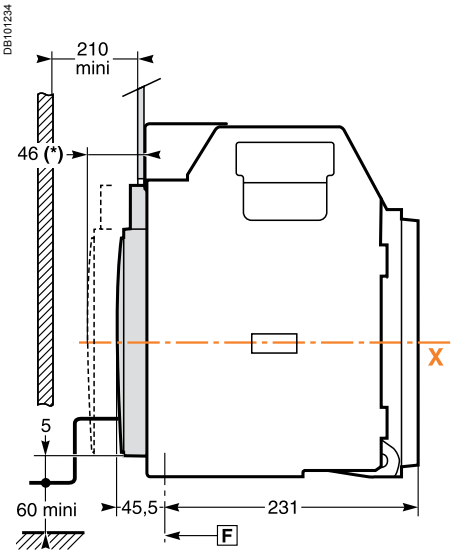

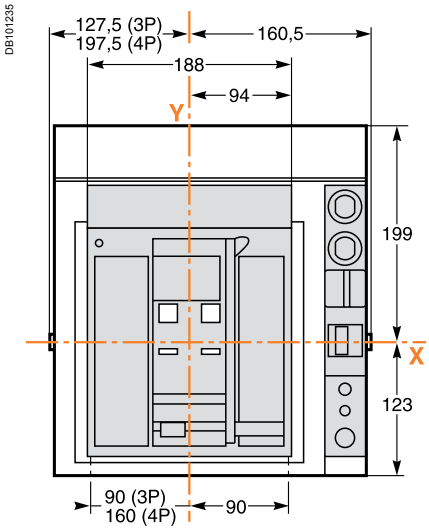

(*) Disconnected position.

Bottom mounting (on base plate or rails)

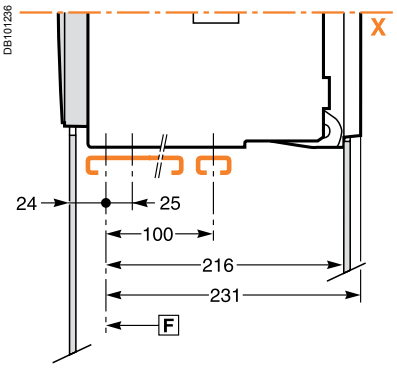

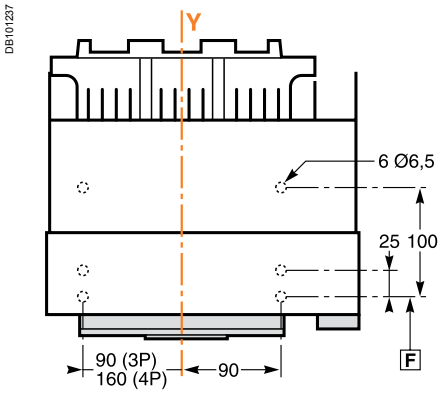

Rear mounting detail (on upright or backplate)

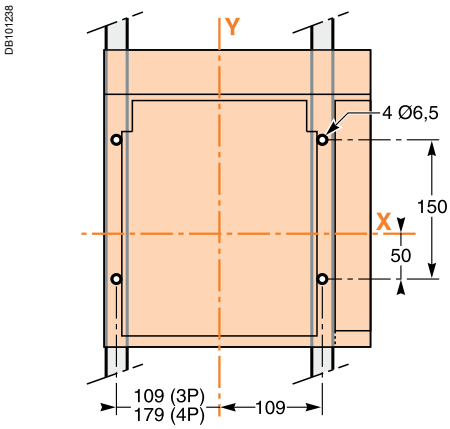

Safety clearances

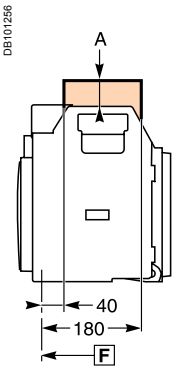

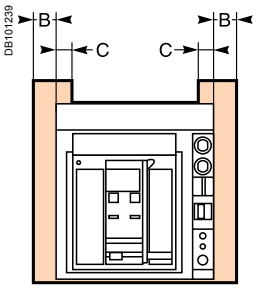

Door cutout

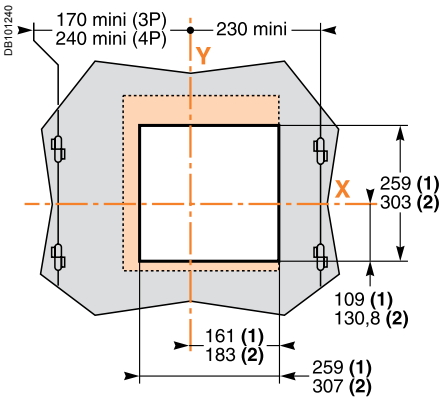

Rear panel cutout

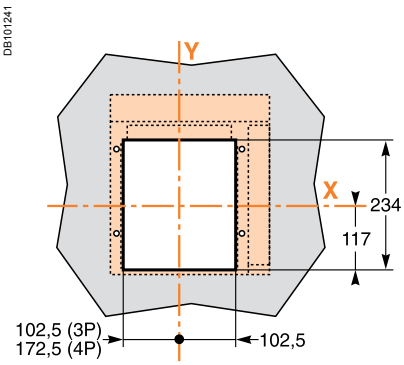

For voltages ≤ 690 V

	Parts		
	Insulated	Metal	Energised
A	0	0	30
B	10	10	60
C	0	0	30

F : datum.

(1) Without escutcheon.
(2) With escutcheon.
Note: X and Y are the symmetry planes for a 3-pole device.

Connections

Horizontal rear connection

DB101242

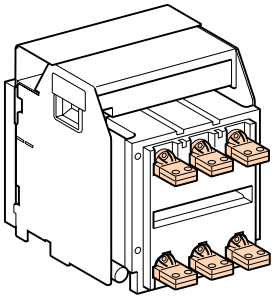

DB101243

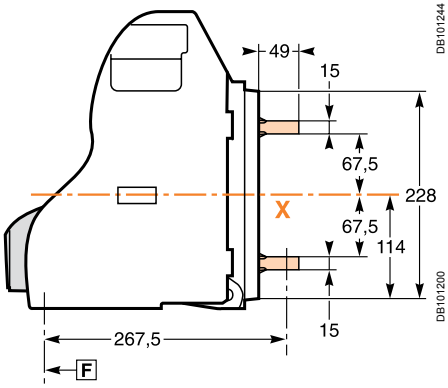

Detail

DB101244

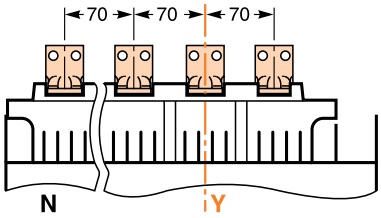

DB101200

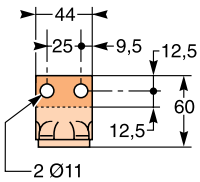

Vertical rear connection

DB101246

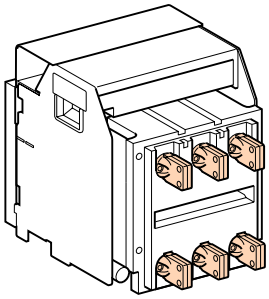

DB101247

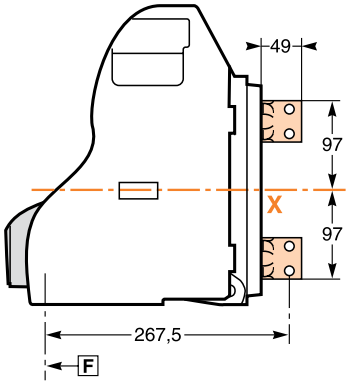

Detail

DB101249

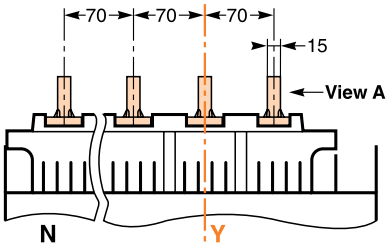

DB101250

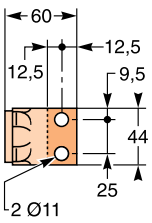

View A detail.

Front connection

DB101251

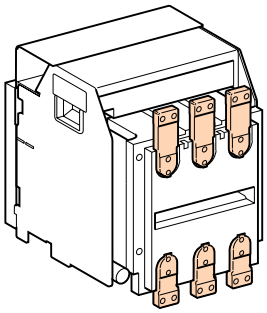

DB101252

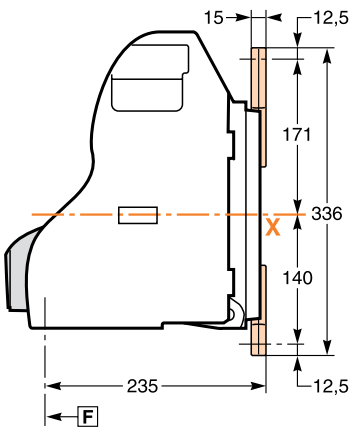

Detail

DB101254

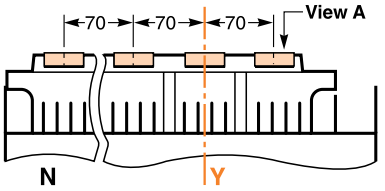

Top connection

DB101255

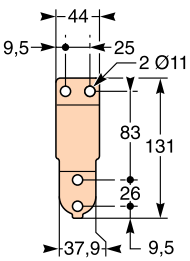

Bottom connection

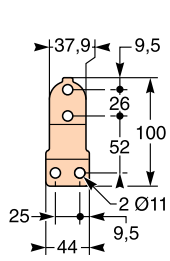

View A detail.

Note: *recommended connection screws:* ***M10*** *class 8.8.*
Tightening torque: ***50 Nm*** *with contact washer.*

NT06 to NT16 circuit breakers
Drawout 3/4-poles device

Connections

Front connection with spreaders

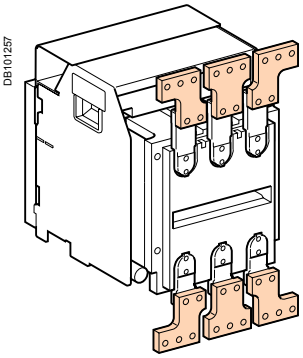

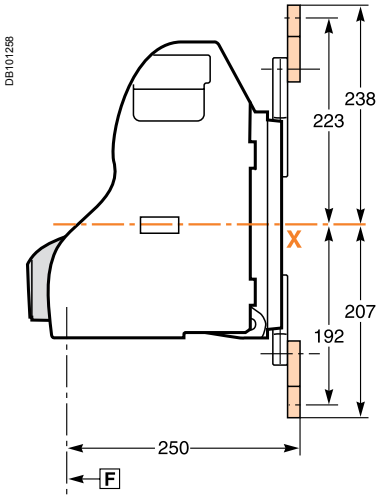

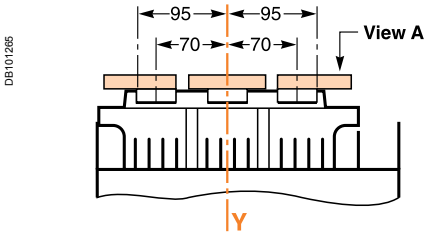

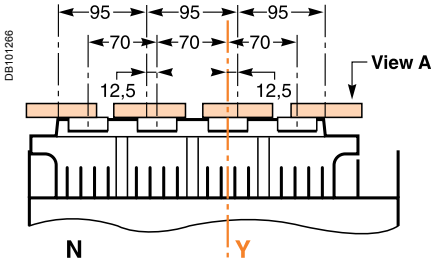

Spreader detail

Middle left or middle right spreader for 4P.

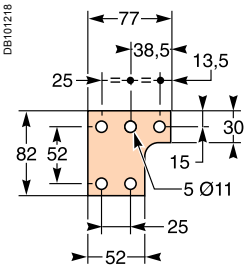

View A detail.

Middle spreader for 3P.

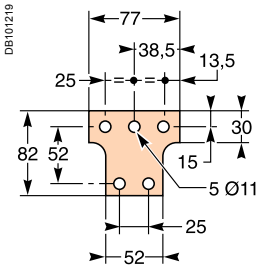

Left or right spreader for 4P.

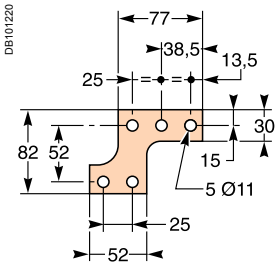

Left or right spreader for 3P.

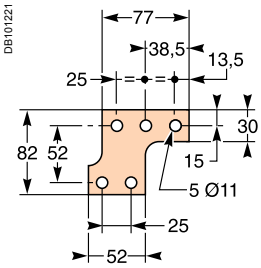

: datum.

Note: X and Y are the symmetry planes for a 3-pole device.

Connections

Front connection via vertical connection adapters fitted with cable-lug adapters

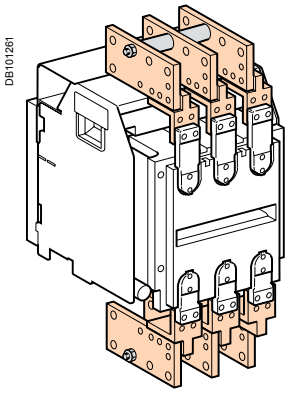

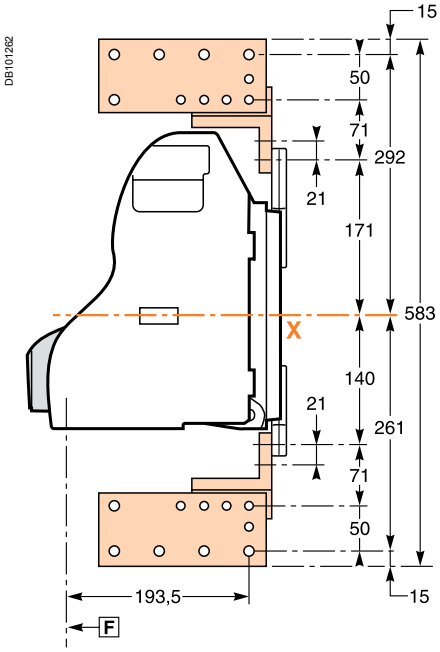

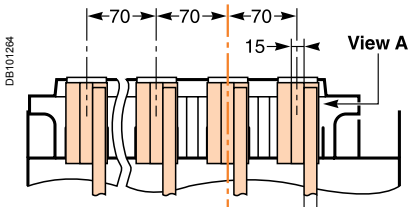

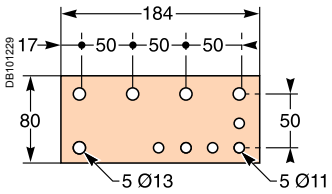

View A detail.

Note: *recommended connection screws:* ***M10*** *class 8.8.*
Tightening torque: ***50 Nm*** *with contact washer.*

NW08 to NW32 circuit breakers
Fixed 3/4-poles device

Dimensions

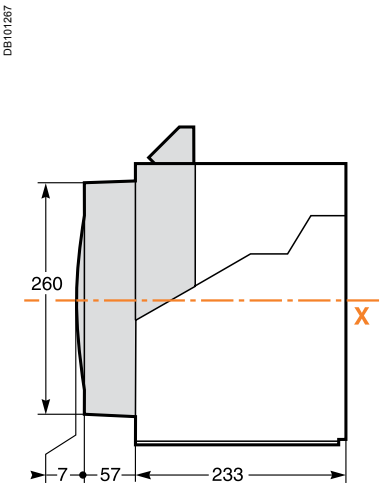

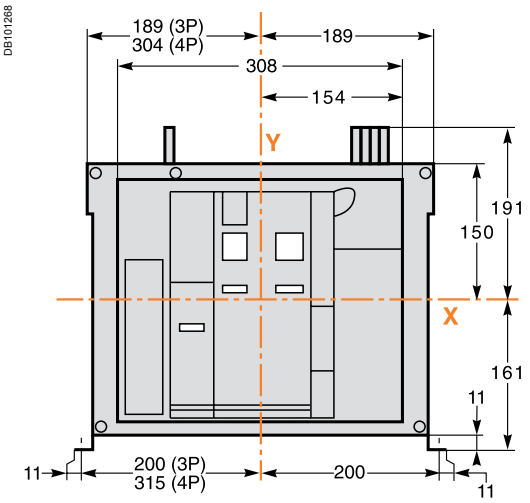

Mounting on base plate or rails

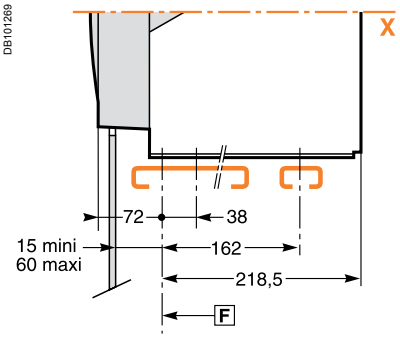

Mounting detail

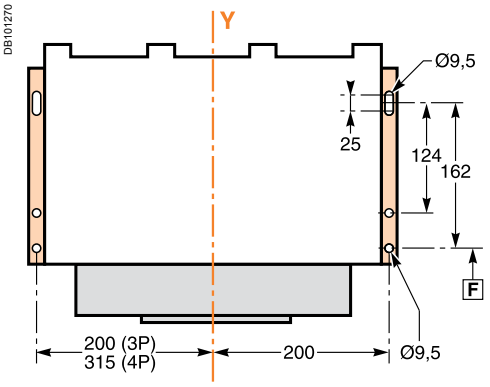

Safety clearances

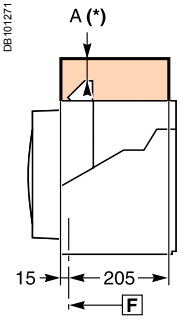

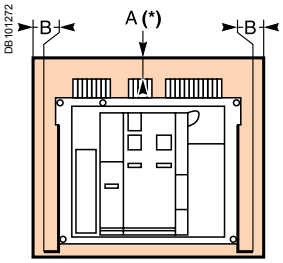

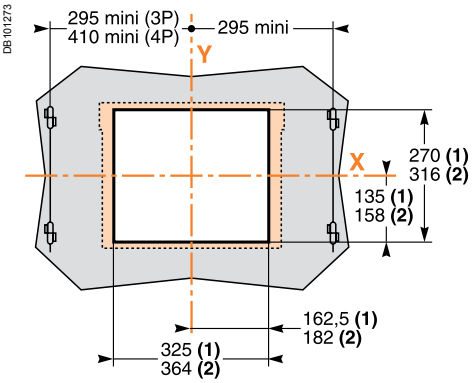

	Insulated parts	Metal parts	Energised parts
A	0	0	100
B	0	0	60

F : *datum.*

(1) Without escutcheon.
(2) With escutcheon.
Note: X and Y are the symmetry planes for a 3-pole device.
A(*) An overhead clearance of 50 mm is required to remove the arc chutes.
An overhead clearance of 20 mm is required to remove the terminal block.

Connections

Horizontal rear connection

DB101274

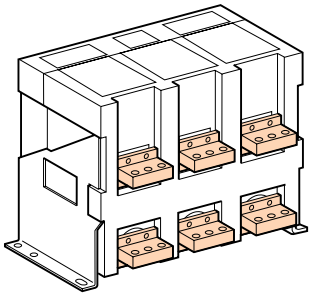

DB101276

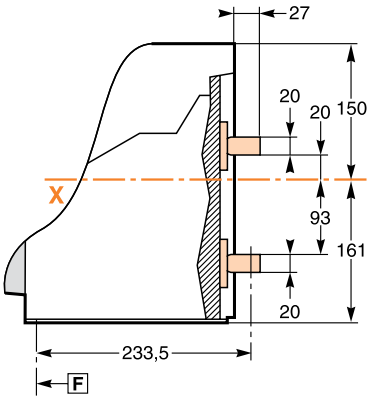

Detail

DB101277

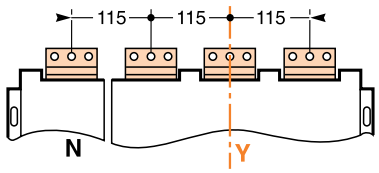

DB101278

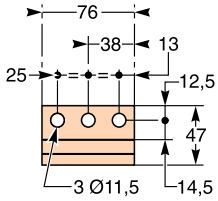

Vertical rear connection

DB101279

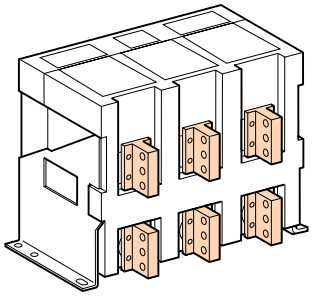

DB101280

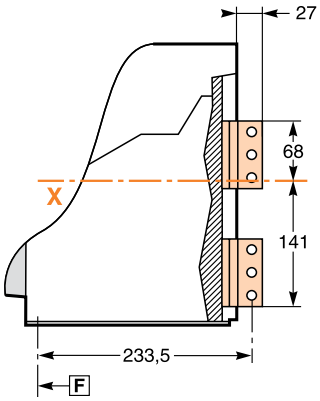

Detail

DB101287

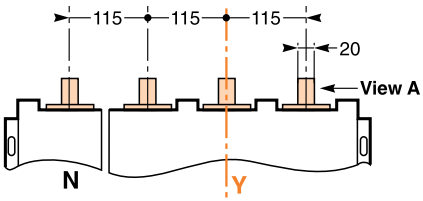

DB101282

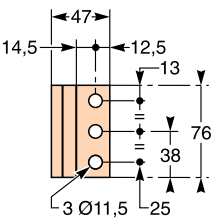

View A detail.

Front connection

DB101283

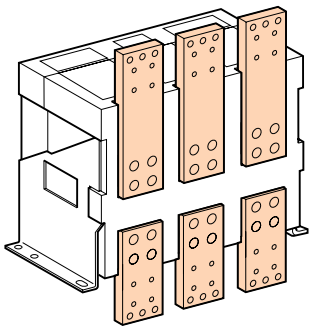

DB101284

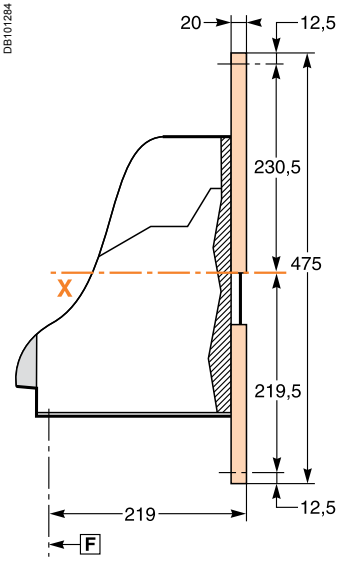

Detail

DB101288

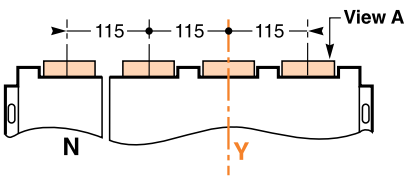

Top connection

DB101286

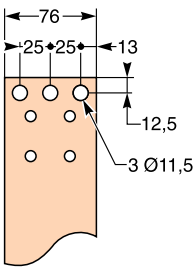

Bottom connection

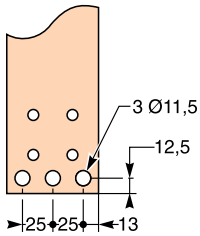

View A detail.

Note: *recommended connection screws:* ***M10*** *class 8.8.*
Tightening torque: ***50 Nm*** *with contact washer.*

NW08 to NW32 circuit breakers
Drawout 3/4-poles device

Dimensions

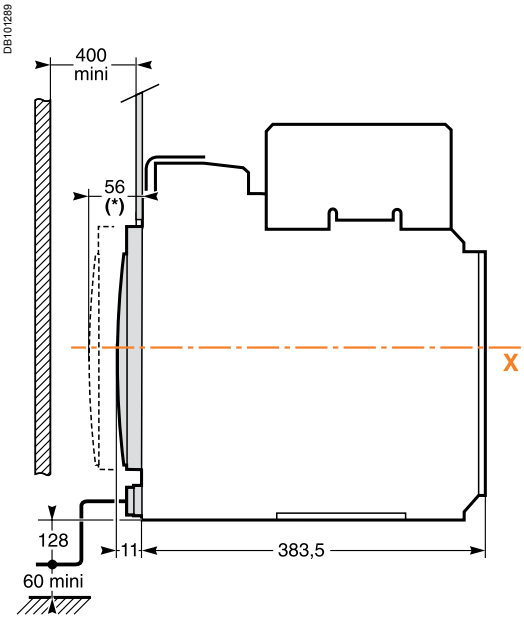

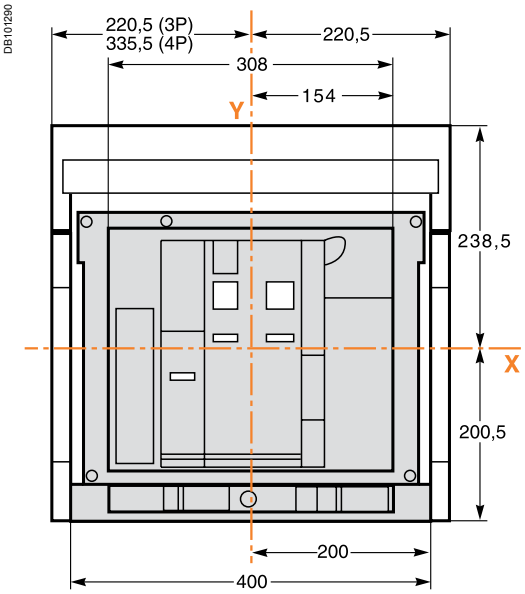

(*) Disconnected position.

Mounting on base plate or rails

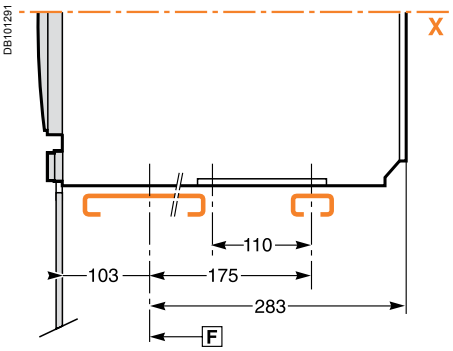

Mounting detail

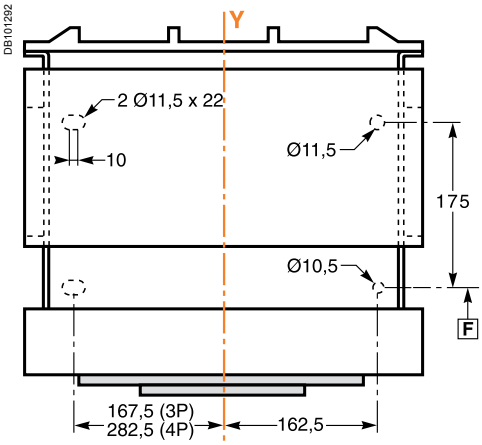

Safety clearances

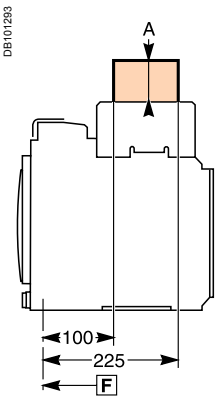

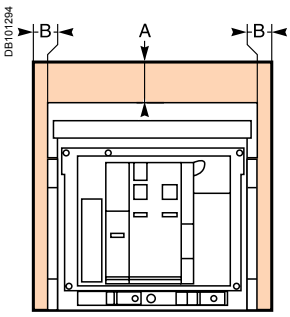

Door cutout

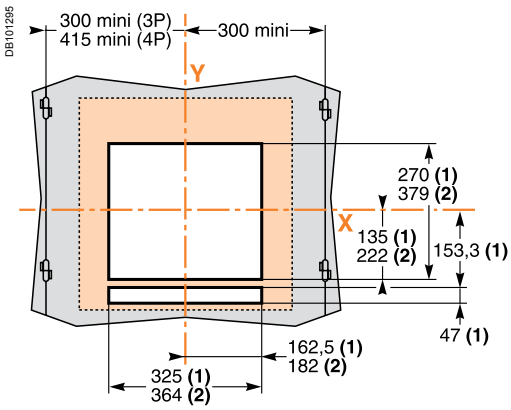

	Insulated parts	Metal parts	Energised parts
A	0	0	0
B	0	0	60

F : *datum.*

(1) Without escutcheon.
(2) With escutcheon.
Note: X and Y are the symmetry planes for a 3-pole device.

Connections

Horizontal rear connection

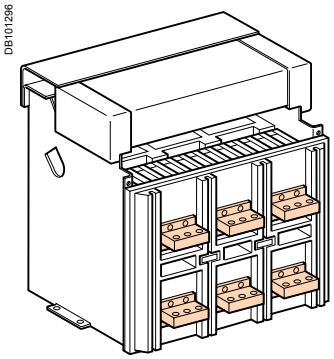

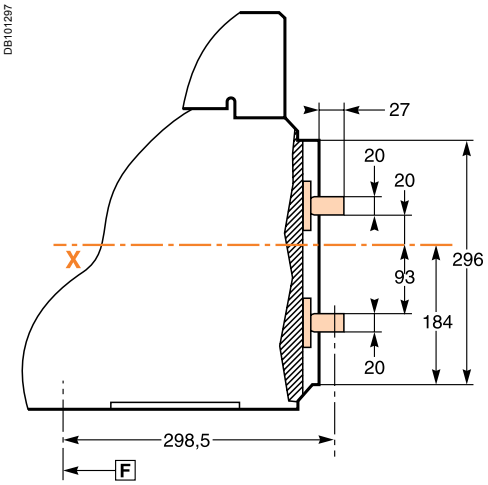

Detail

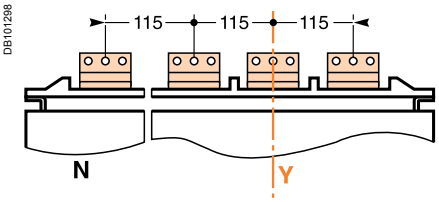

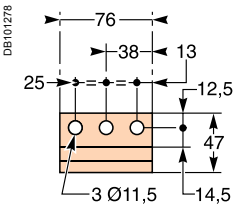

Vertical rear connection

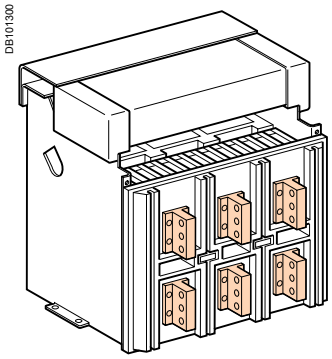

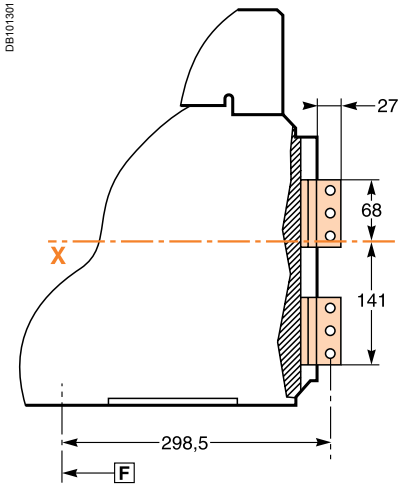

Detail

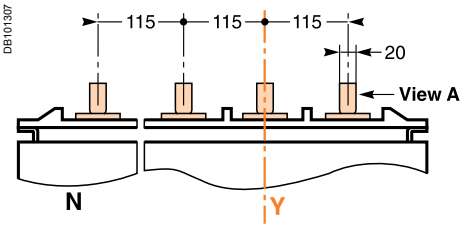

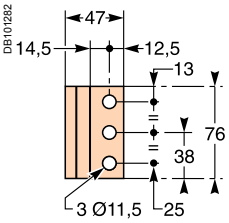

View A detail.

Front connection

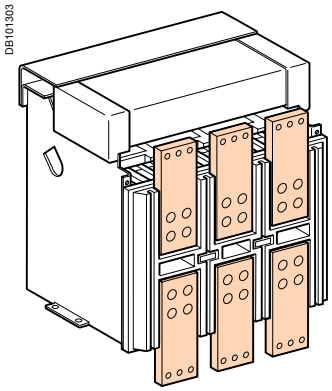

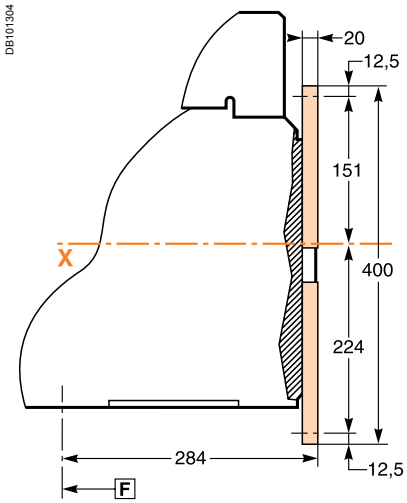

Detail

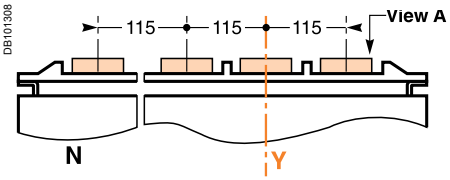

Top connection

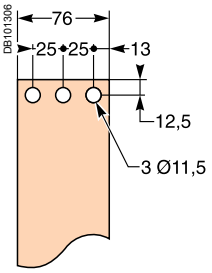

Bottom connection

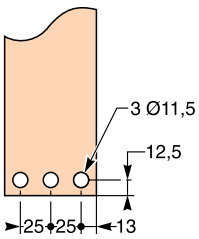

View A detail.

Note: *recommended connection screws:* ***M10*** *class 8.8.*
Tightening torque: ***50 Nm*** *with contact washer.*

NW40 circuit breakers
Fixed 3/4-poles device

Dimensions

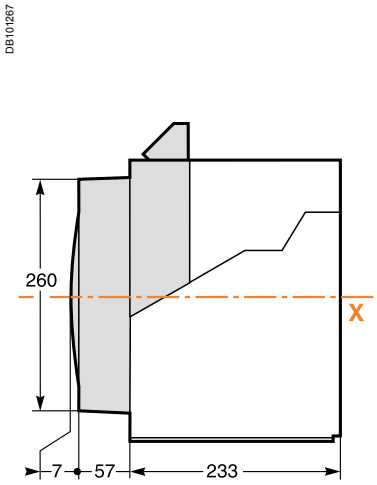

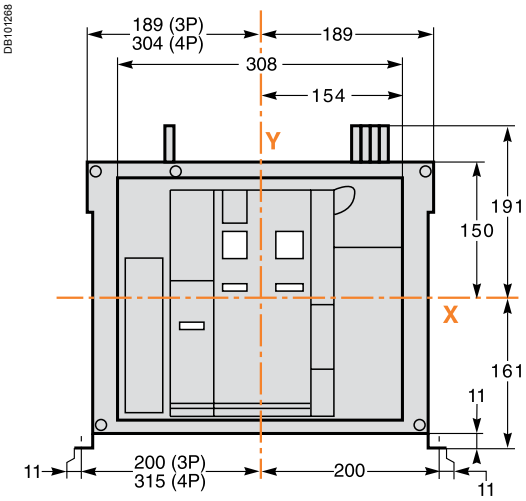

Mounting on base plate or rails

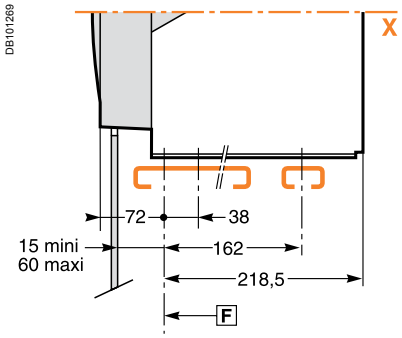

Mounting detail

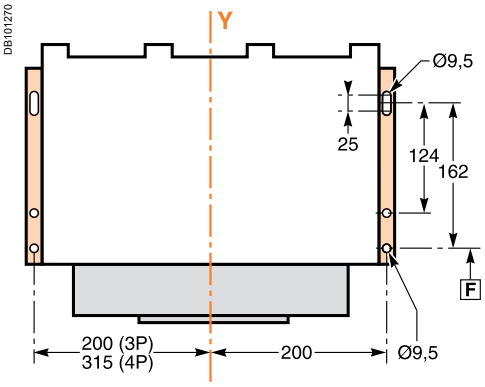

Safety clearances

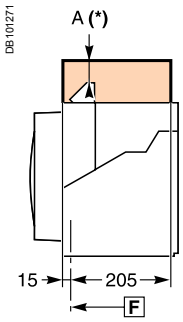

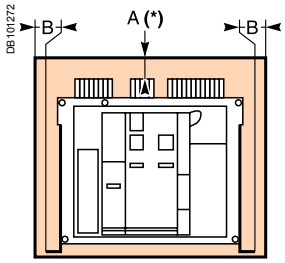

Door cutout

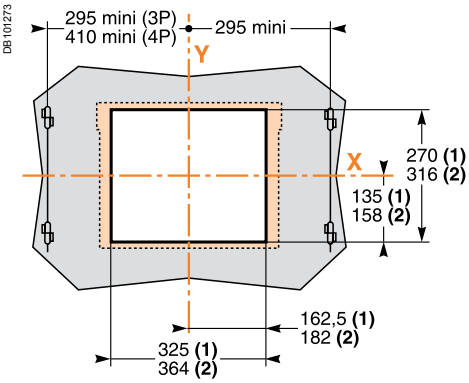

	Insulated parts	Metal parts	Energised parts
A	0	0	100
B	0	0	60

F : datum.

(1) Without escutcheon.
(2) With escutcheon.
Note: X and Y are the symmetry planes for a 3-pole device.
A(*) An overhead clearance of 110 mm is required to remove the arc chutes.
An overhead clearance of 20 mm is required to remove the terminal block.

Connections

Horizontal rear connection

DB101309

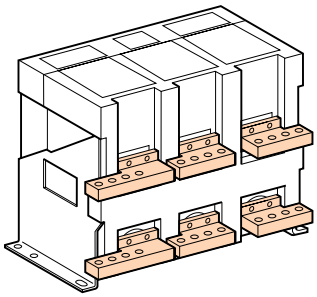

DB101276

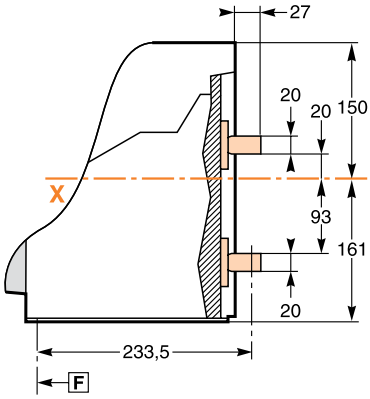

Detail

DB101310

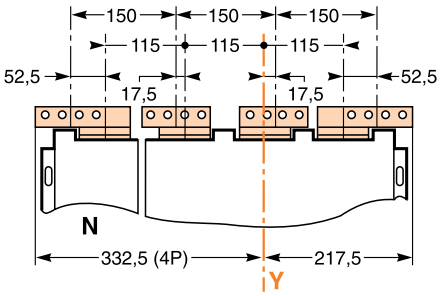

DB101311

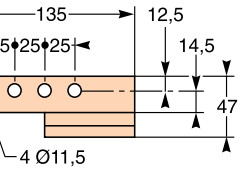

DB101315

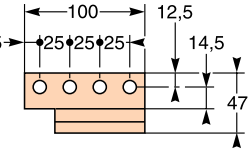

Vertical rear connection

DB101312

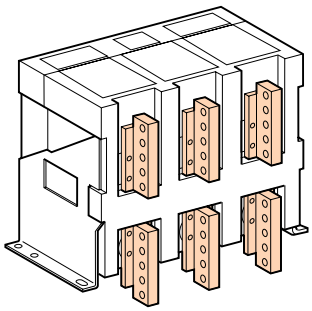

DB101313

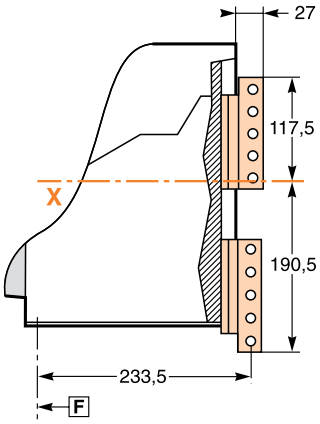

Detail

DB101287

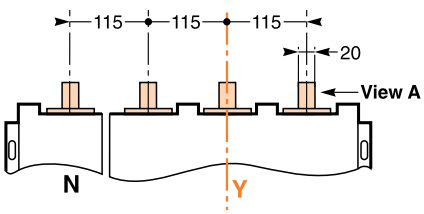

DB101314

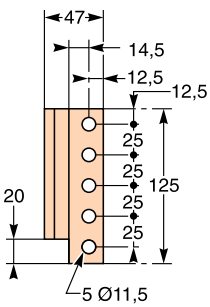

*Note: recommended connection screws: **M10** class 8.8.*
*Tightening torque: **50 Nm** with contact washer.*

NW40 circuit breakers
Drawout 3/4-poles device

Dimensions

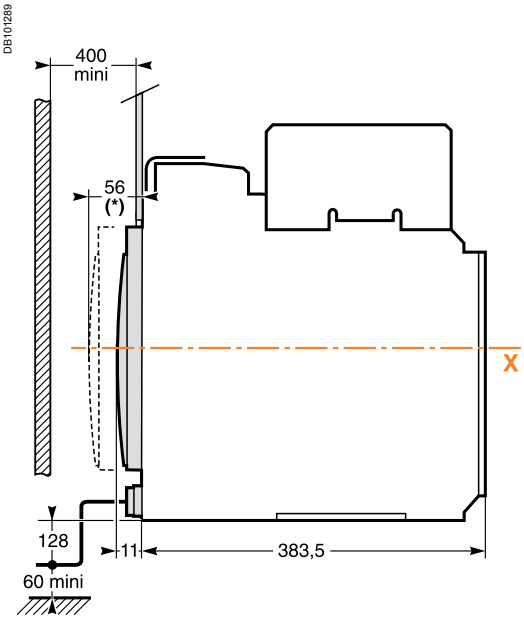

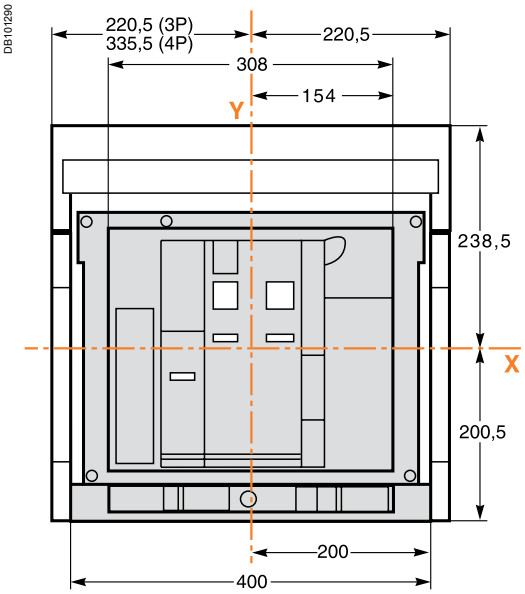

(*) Disconnected position.

Mounting on base plate or rails

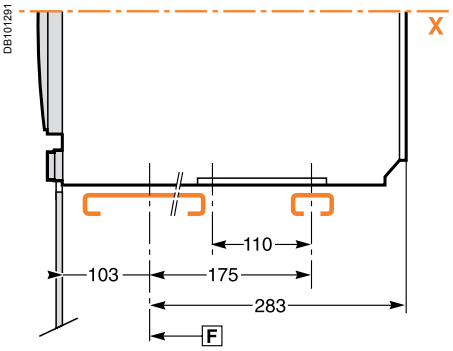

Mounting detail

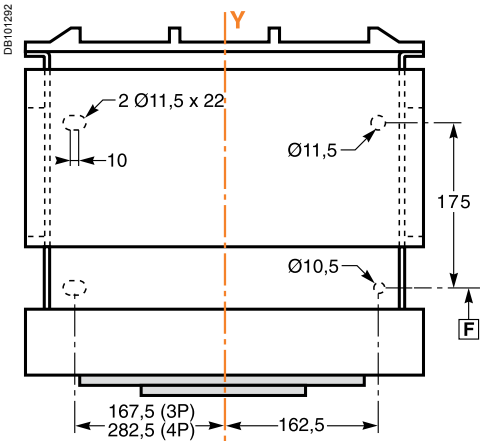

Safety clearances

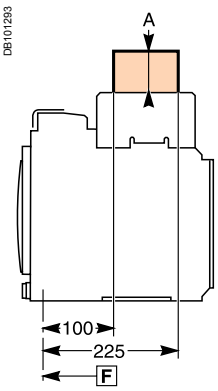

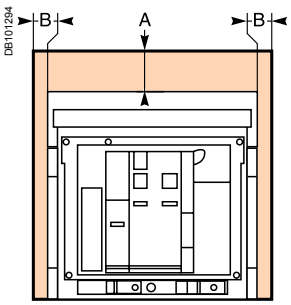

	Insulated parts	Metal parts	Energised parts
A	0	0	0
B	0	0	60

F : datum.

Door cutout

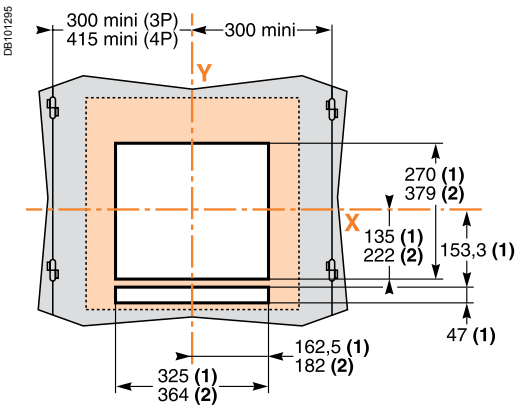

(1) Without escutcheon.
(2) With escutcheon.
Note: X and Y are the symmetry planes for a 3-pole device.
The safety clearances take into account the space required to remove the arc chutes.

Connections

Horizontal rear connection

DB101316

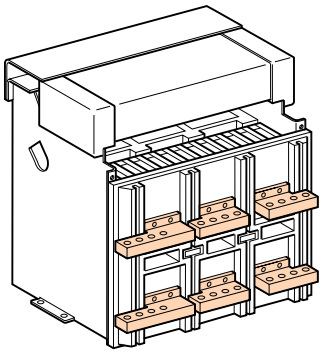

DB101297

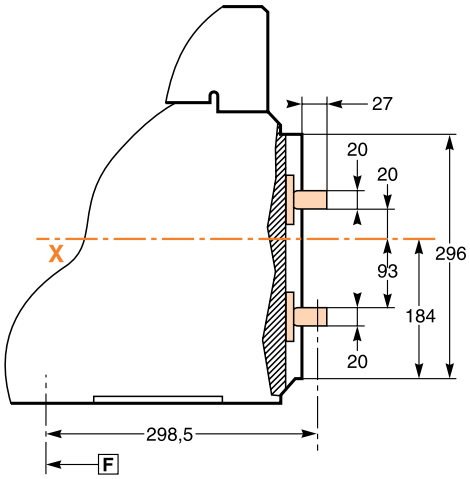

Detail

DB101317

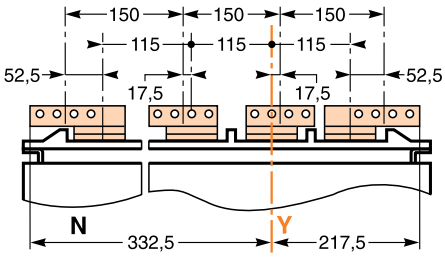

DB101311

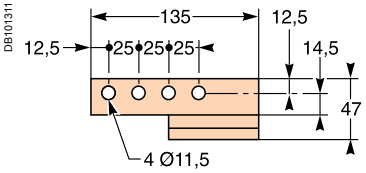

DB101315

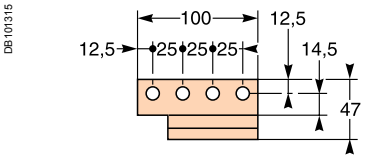

Vertical rear connection

DB101318

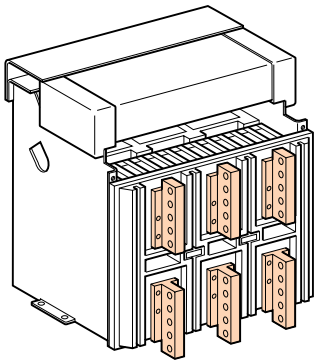

DB101319

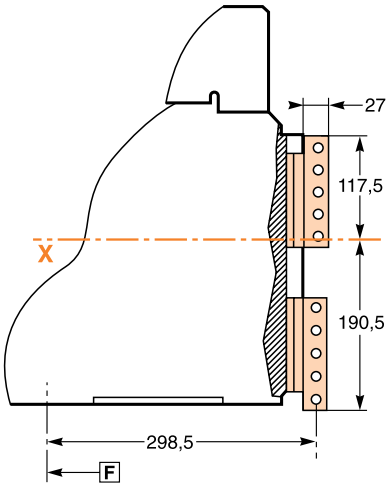

DB101314

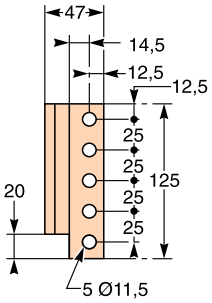

View A detail.

Detail

DB101307

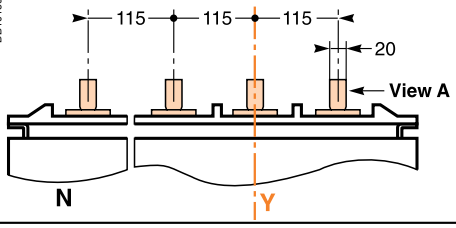

*Note: recommended connection screws: **M10** class 8.8.*
*Tightening torque: **50 Nm** with contact washer.*

NW40b to NW63 circuit breakers

Fixed 3/4-poles device

Dimensions

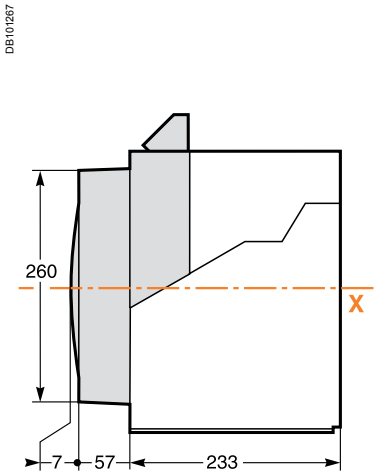

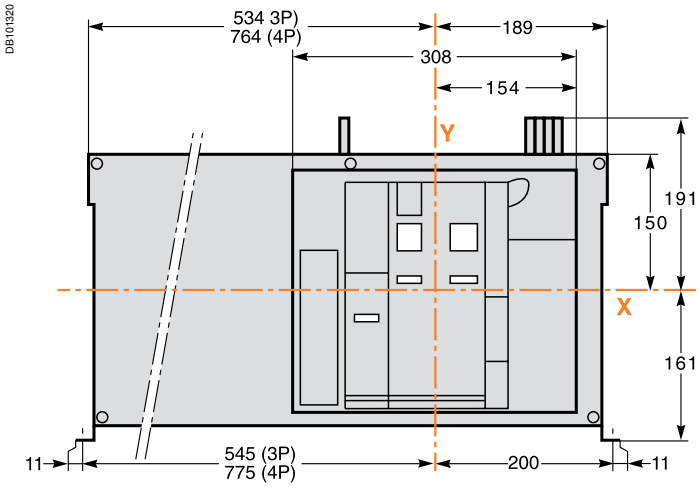

Mounting on base plate or rails

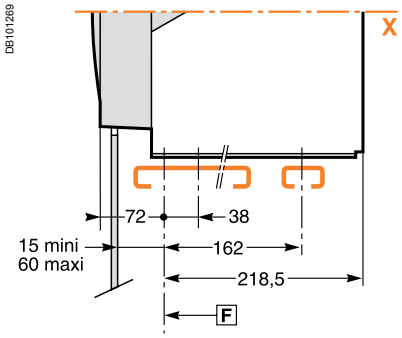

Mounting detail

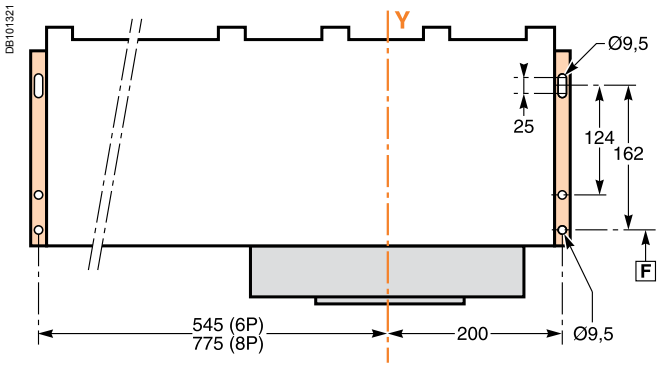

Safety clearances

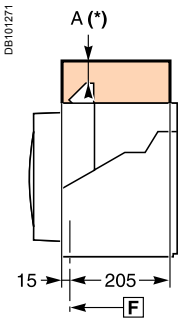

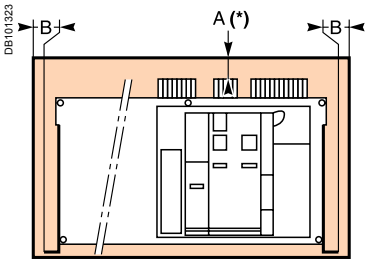

Door cutout

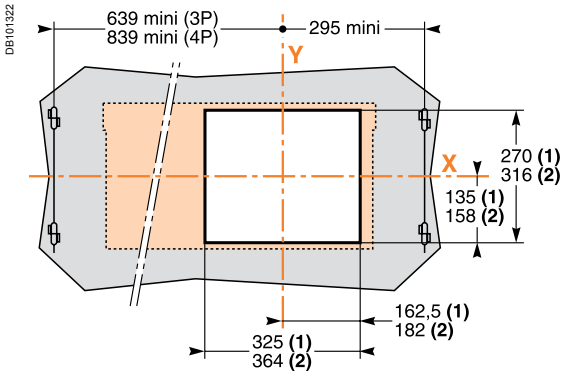

	Insulated parts	Metal parts	Energised parts
A	0	0	100
B	0	0	60

F : datum.

(1) Without escutcheon.
(2) With escutcheon.
Note: X and Y are the symmetry planes for a 3-pole device.
A(*) An overhead clearance of 110 mm is required to remove the arc chutes.
An overhead clearance of 20 mm is required to remove the terminal block.

Connections

Horizontal rear connection (NW40b - NW50)

DB101332

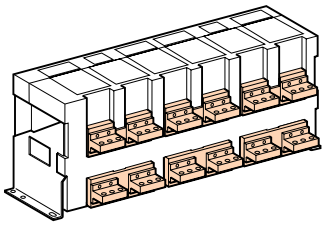

DB101324

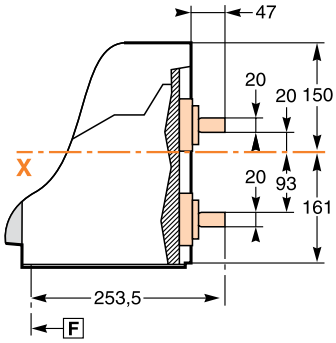

Detail

DB101325

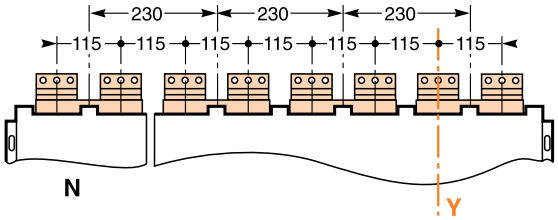

DB101278

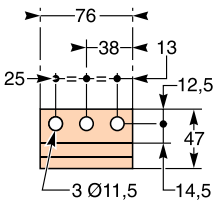

Vertical rear connection (NW40b - NW50)

DB101327

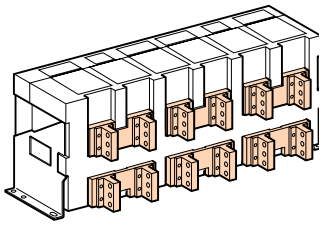

DB101328

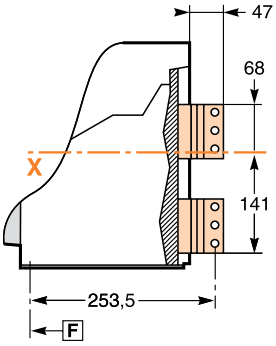

Detail

DB101333

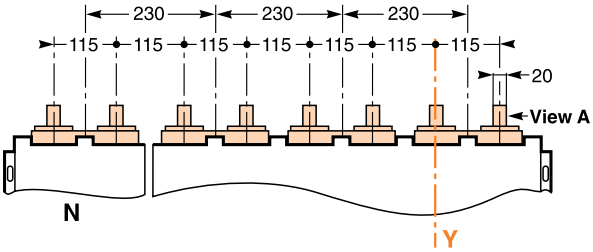

DB101282

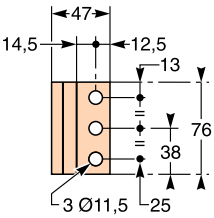

View A detail.

Vertical rear connection (NW63)

DB101330

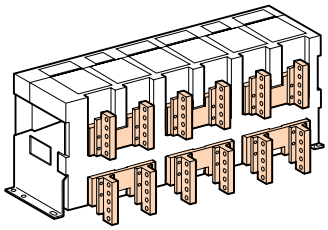

DB101331

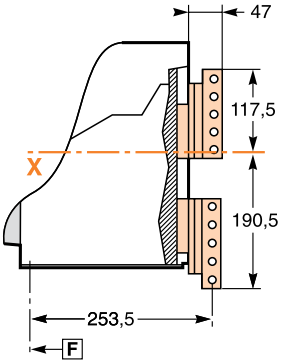

Detail

DB101333

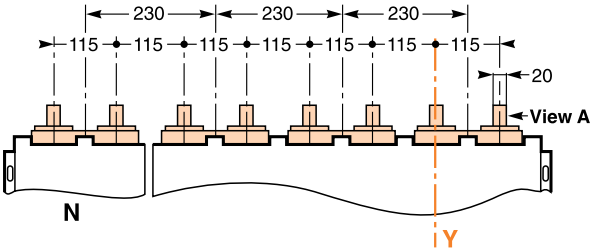

DB101314

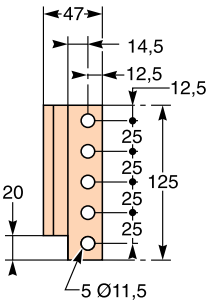

View A detail.

Note: *recommended connection screws:* ***M10*** *s/s class A4 80.*
Tightening torque: ***50 Nm*** *with contact washer.*

NW40b to NW63 circuit breakers

Drawout 3/4-poles device

Dimensions

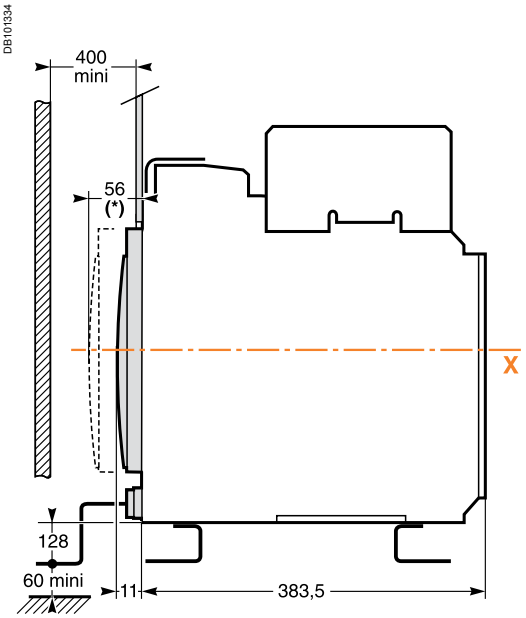

(*) Disconnected position.

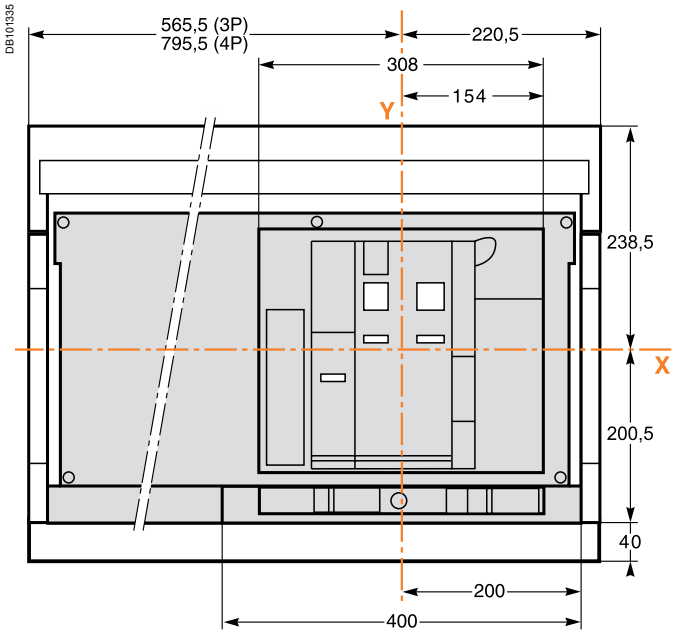

Mounting on base plate or rails

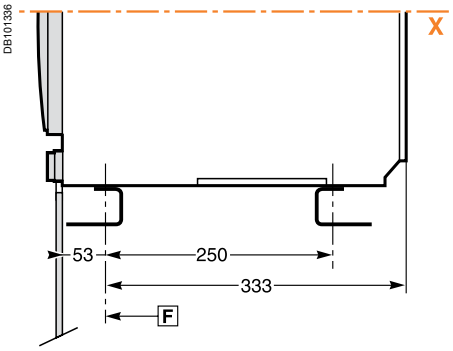

Mounting detail

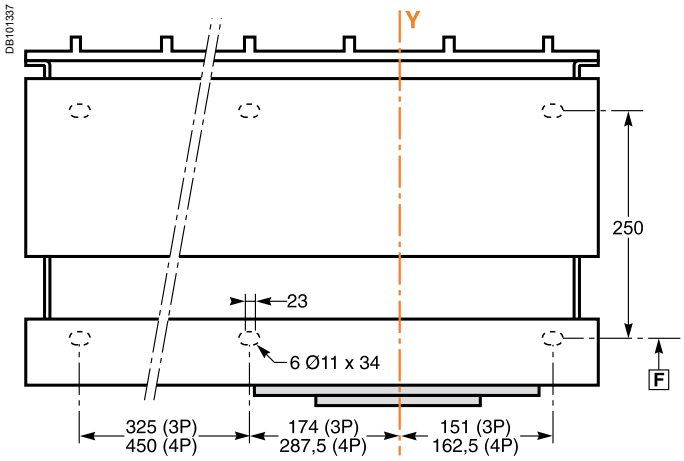

Safety clearances

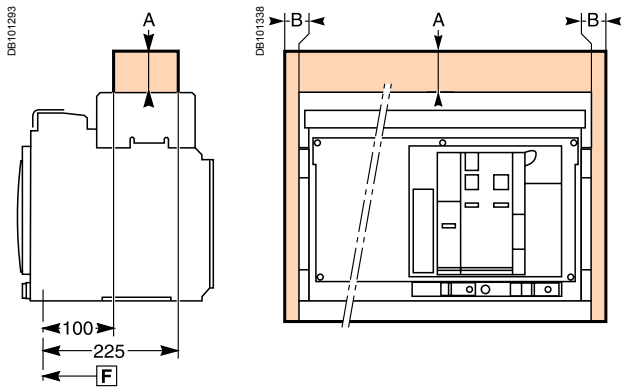

Door cutout

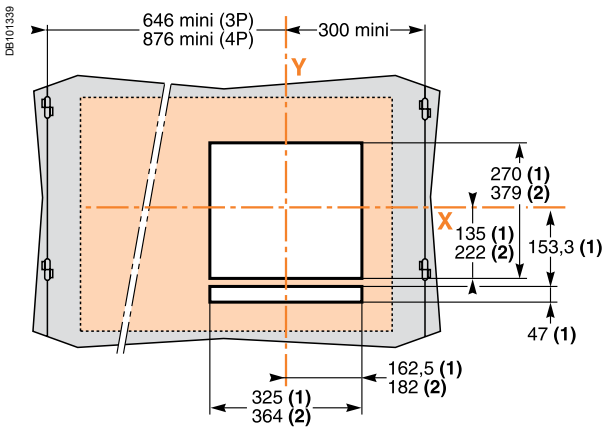

	Insulated parts	Metal parts	Energised parts
A	0	0	0
B	0	0	60

(1) Without escutcheon.
(2) With escutcheon.
Note: X and Y are the symmetry planes for a 3-pole device.

: datum. F

Connections

Horizontal rear connection (NW40b - NW50)

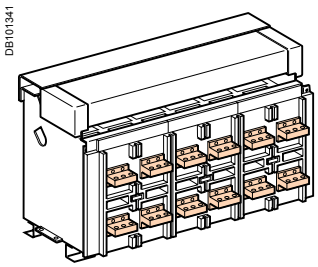

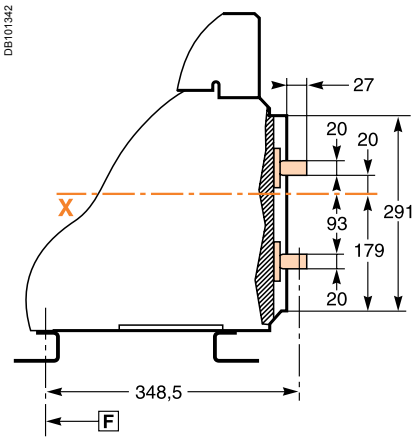

Detail

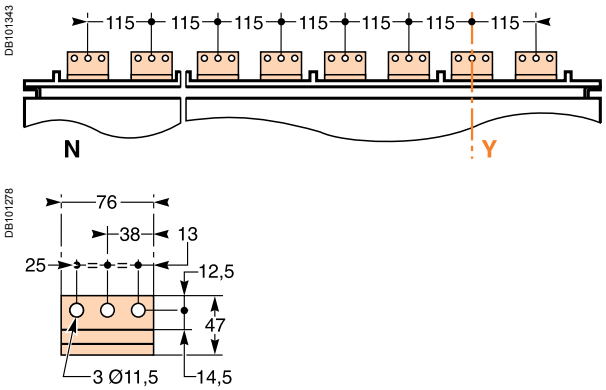

Vertical rear connection (NW40b - NW50)

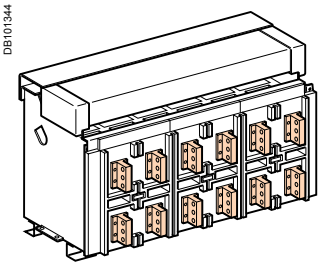

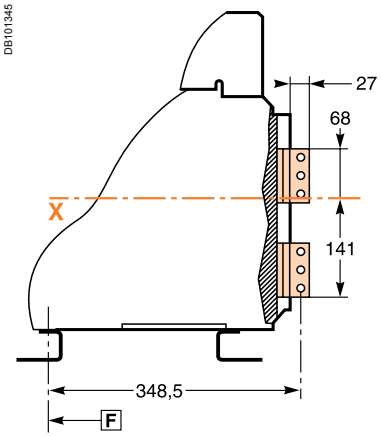

Detail

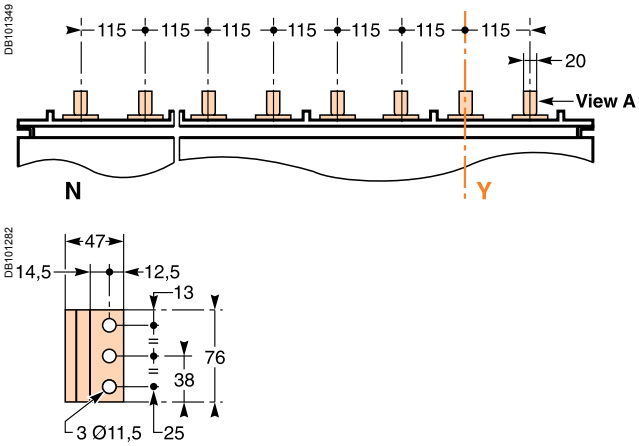

View A detail.

Vertical rear connection (NW63)

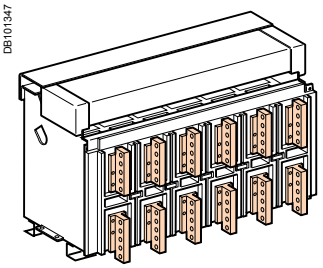

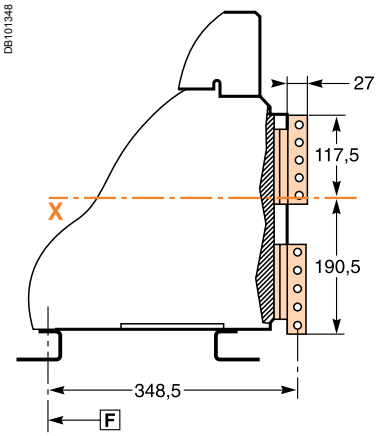

Detail

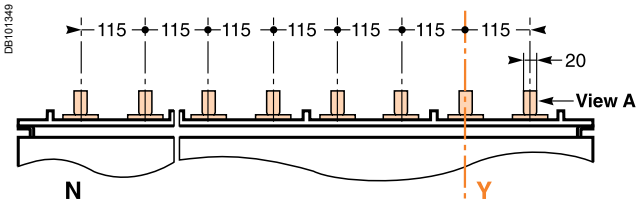

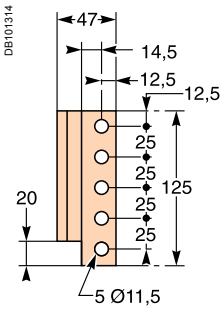

View A detail.

Note: *recommended connection screws:* ***M10*** *s/s class A4 80.*
Tightening torque: ***50 Nm*** *with contact washer.*

NT/NW accessories

Mounting on backplate with special brackets (Masterpact NW08 to 32 fixed)

DB101350

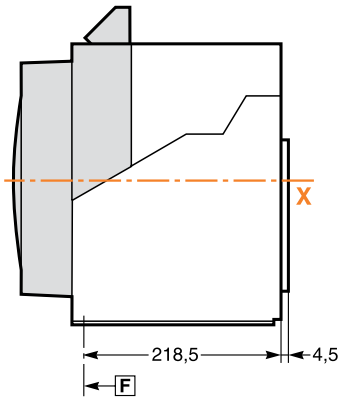

DB101351

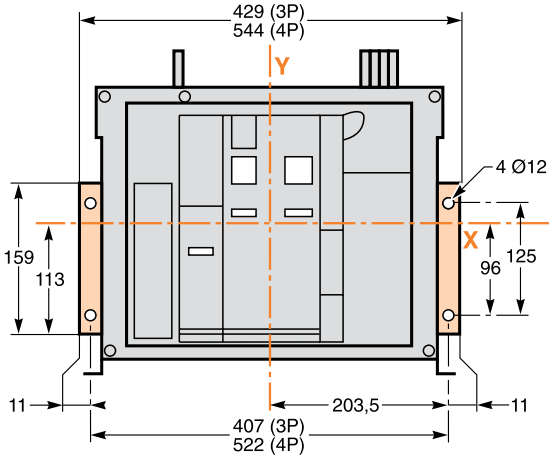

Disconnectable front-connection adapter (Masterpact NW08 to 32 fixed)

Horizontal rear connection

DB101352

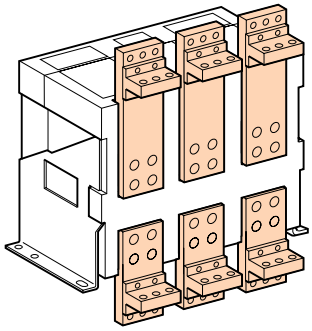

DB101353

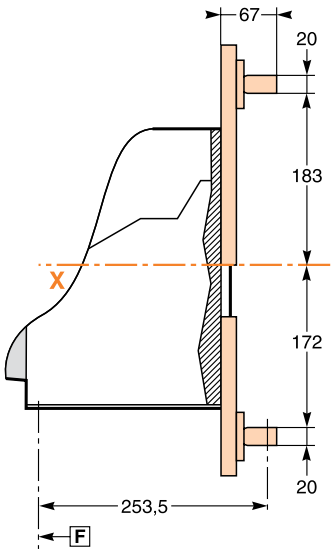

Detail

DB101354

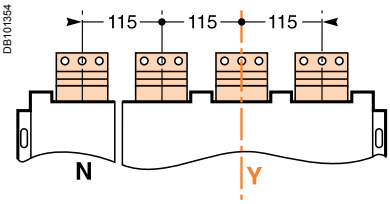

DB101278

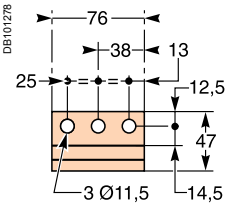

View A detail.

Vertical rear connection

DB101355

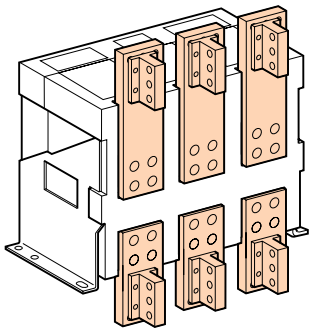

DB101356

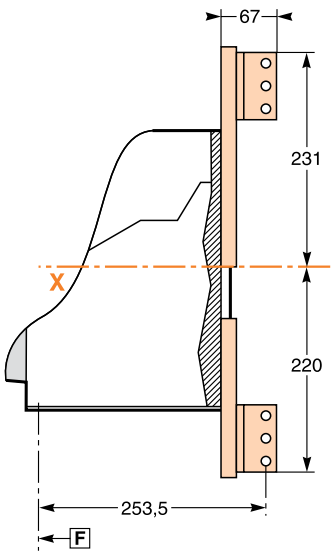

Detail

DB101358

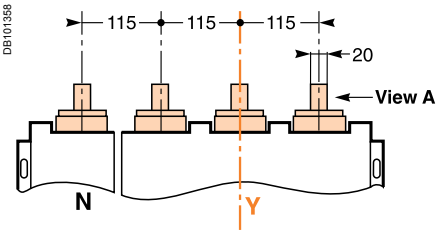

DB101282

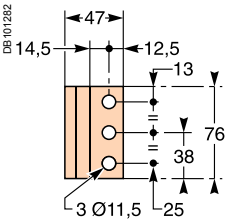

View A detail.

*Note: recommended connection screws: **M10** class 8.8.*
*Tightening torque: **50 Nm** with contact washer.*

F : *datum.*

Rear panel cutout (drawout devices)

NW08 to NW40

Rear view

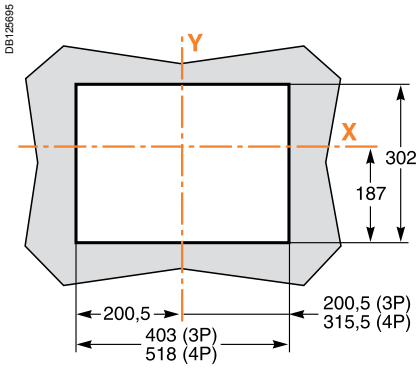

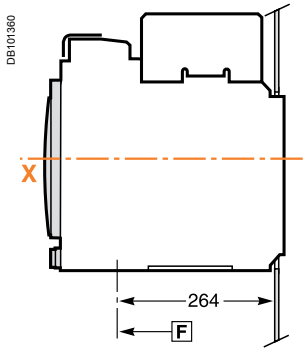

NW40b to NW63

Rear view

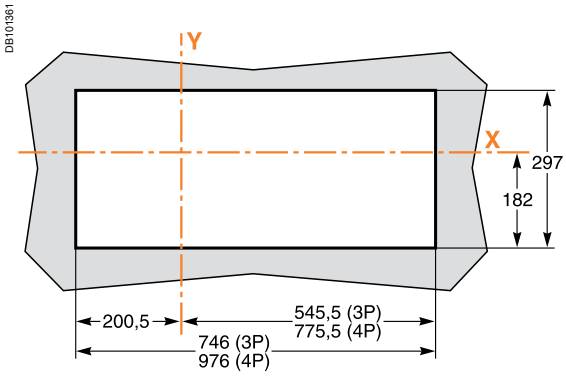

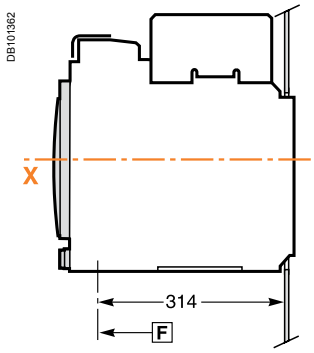

Escutcheon

Masterpact NT

Fixed device

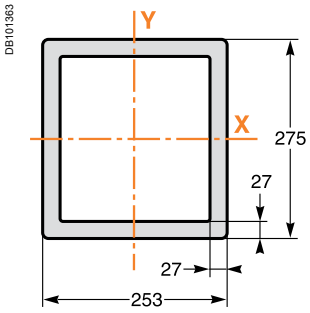

Drawout device

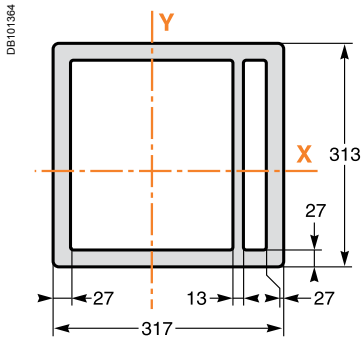

Masterpact NW

Fixed device

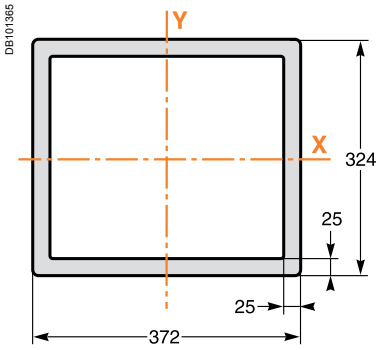

Drawout device

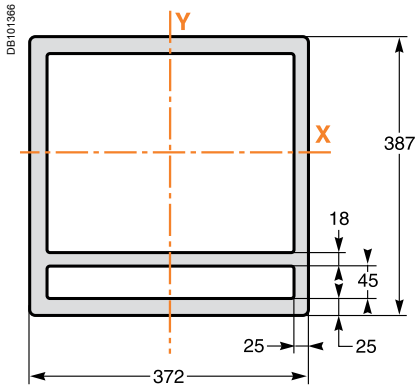

: datum.

F

NT/NW external modules

Connection of auxilary wiring to terminal block

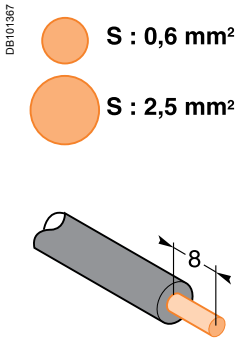

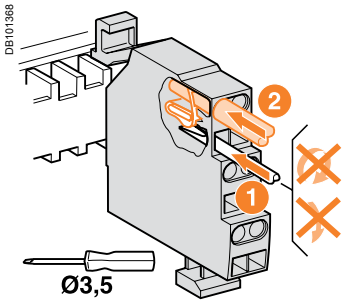

One conductor only per connection point.

M6C relay module

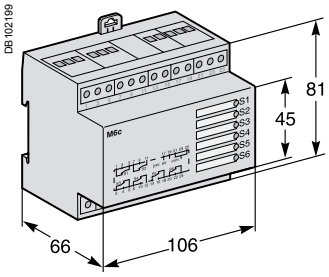

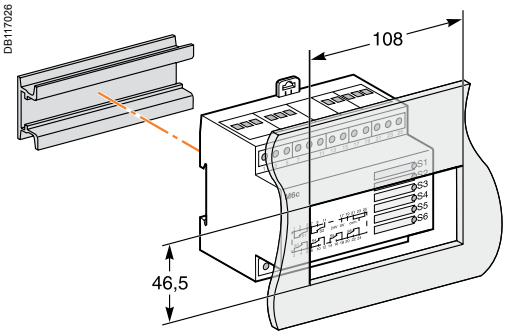

External power supply module (AD)

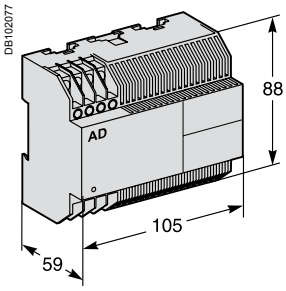

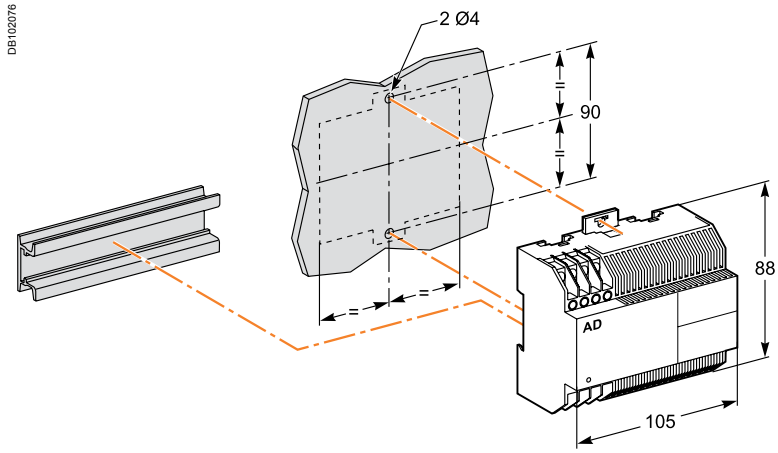

Battery module (BAT)

Mounting

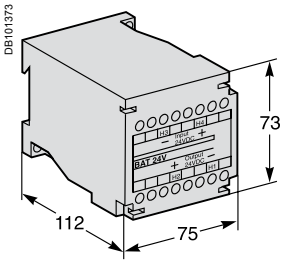

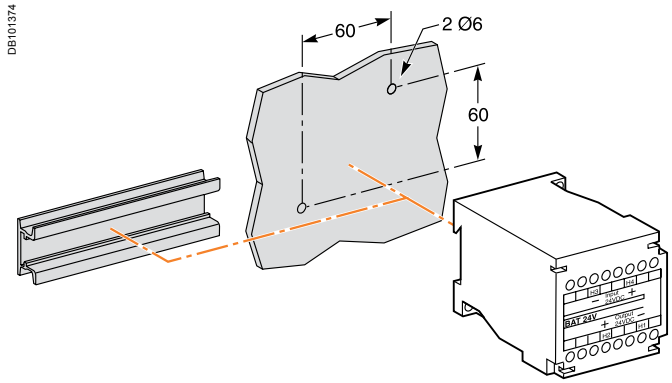

Delay unit for MN release

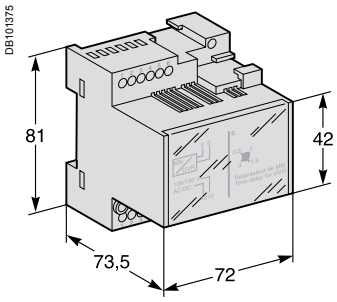

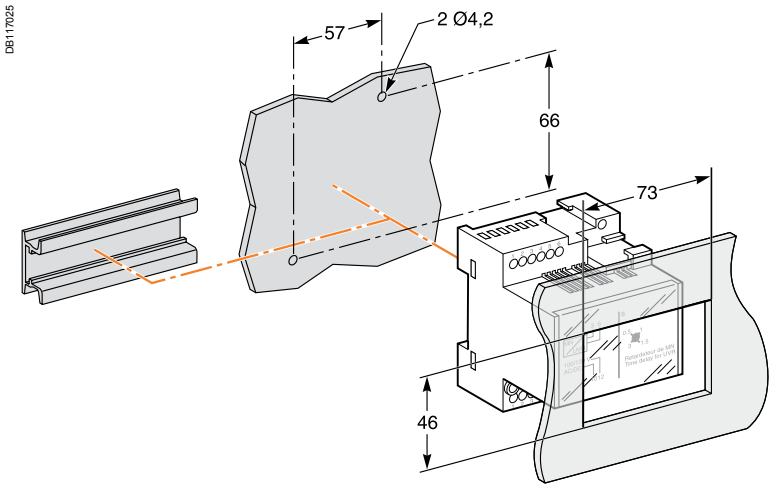

“Chassis” communication module

ModBUS

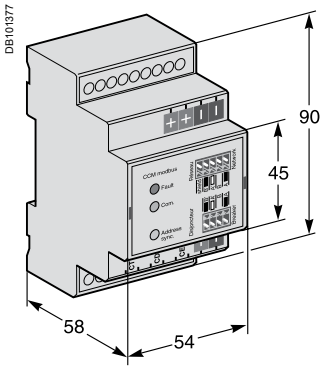

External sensor for source ground return (SGR) protection

Sensor

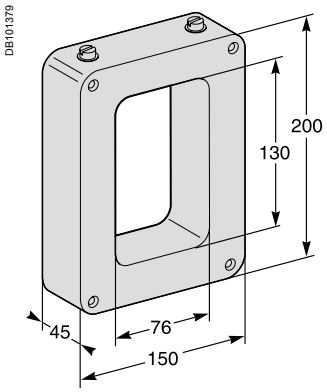

“MGDF summer” module

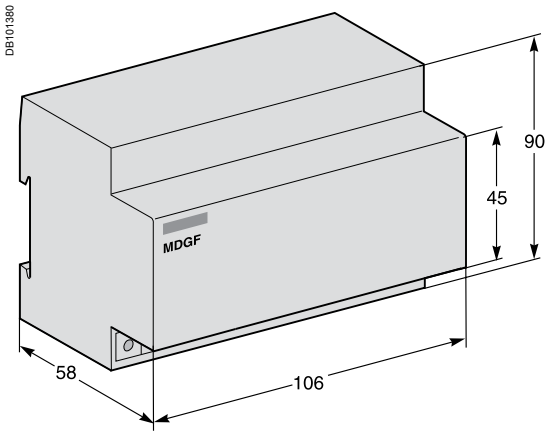

NT/NW external modules

External sensor for external neutral

Dimensions

400/1600 A (NT06 to NT16)

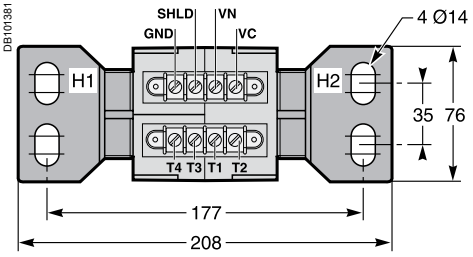

High: 137 mm.

400/2000 A (NW08 to NW20)

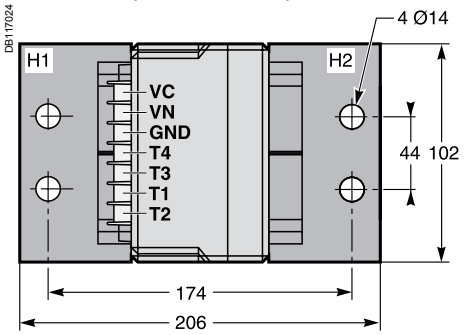

High: 162 mm.

1000/4000 A (NW025 to NW40)

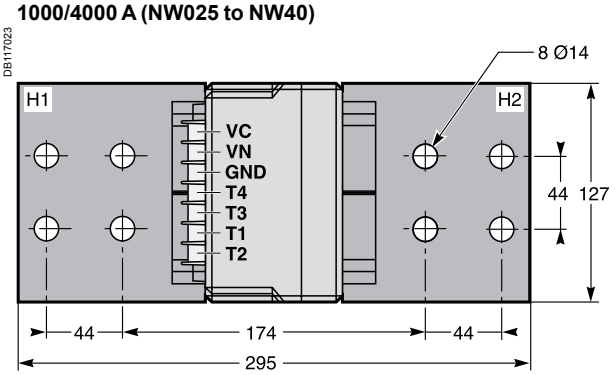

High: 162 mm.

4000/6300 A (NW40b to NW63)

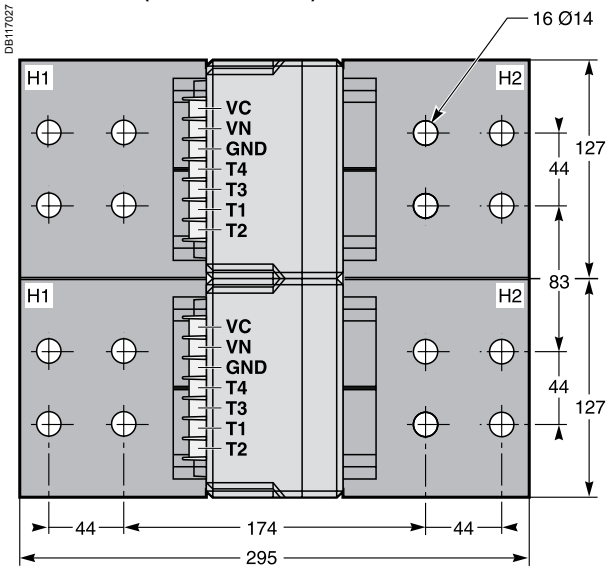

High: 168 mm.

Installation

400/1600 A (NT06 to NT16)

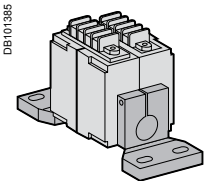

400/2000 A (NW08 to NW20)

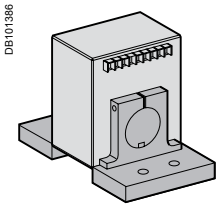

1000/4000 A (NW025 to NW40)

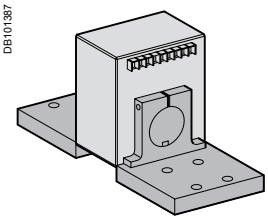

4000/6300 A (NW40b to NW63)

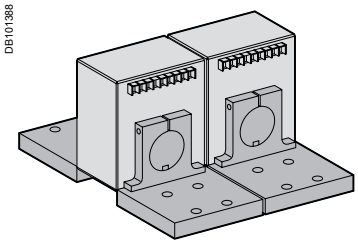

Rectangular sensor for earth leakage protection (Vigi)

280 x 115 mm window

DB101389

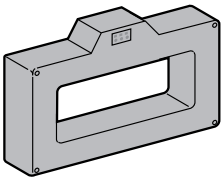

DB101390

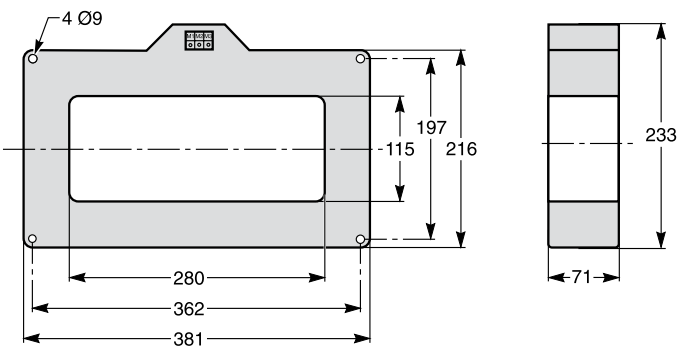

470 x 160 mm window

DB101391

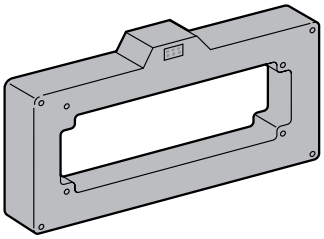

DB101392

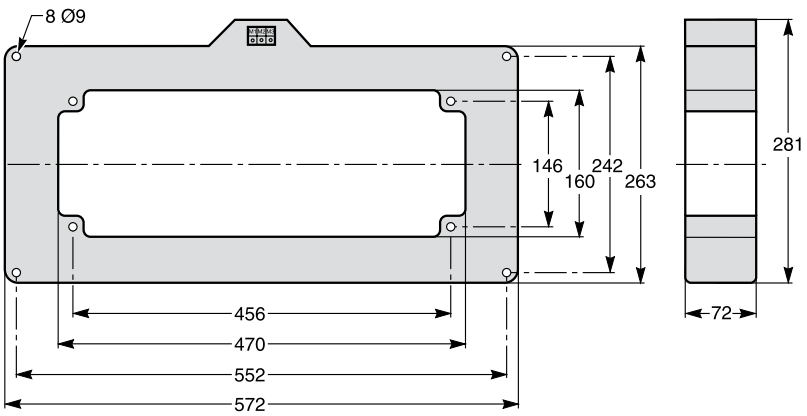

Busbars	I ⩽ 1600 A	I ⩽ 3200
Window (mm)	280 x 115	470 x 160
Weight (kg)	14	18

Busbars path

280 x 115 window

Busbars spaced 70 mm centre-to-centre

DB101393

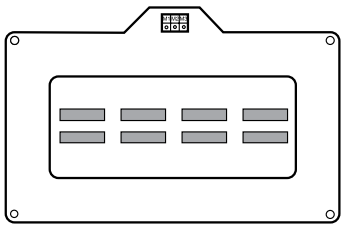

2 bars 50 x 10.

DB101395

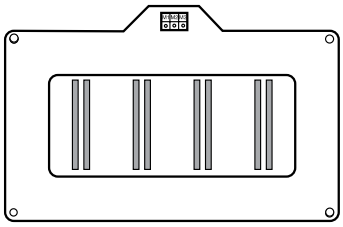

2 bars 100 x 5.

470 x 160 window

Busbars spaced 115 mm centre-to-centre

DB117029

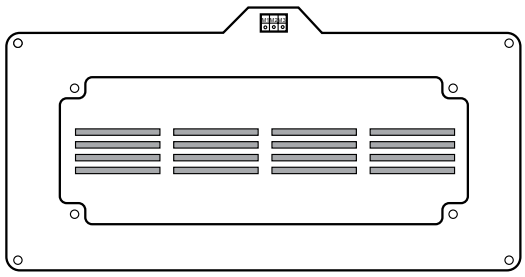

4 bars 100 x 5.

DB117028

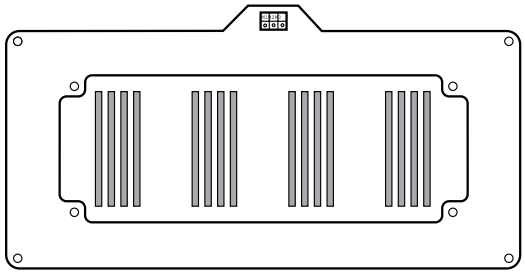

4 bars 125 x 5.

TOOLS

schneider-electric.com

Ce site international vous permet d'accéder à tous les produits Schneider Electric en 2 clics via des fiches gammes synthétiques, et des liens directs vers :

- une librairie riche en documents techniques, catalogues, FAQ brochures...
- les guides de choix interactifs du e-catalogue.
- des sites pour découvrir les nouveautés, avec de nombreuses animations Flash.

Vous y trouverez également des panoramas illustrés, des news auxquelles vous abonner, les contacts de votre pays…

Le guide de l'installation électrique

Conforme à la norme CEI 60364
Ce guide, élément essentiel de l'offre Schneider ELectric, est l'outil indispensable pour vous guider à tout instant dans vos activités :

- bureaux d'études, consultants
- installateurs, tableautiers
- enseignants.

Informations exhaustives et pratiques sur :

- toutes les nouvelles solutions techniques
- toutes les composantes d'une installation avec une vision globale
- toutes les évolutions normatives CEI
- toutes les connaissances électrotechniques fondamentales
- toutes les étapes de conception de la moyenne à la basse tension.

Electrical diagrams

Presentation *3*
Functions and characteristics *A-1*
Installation recommendations *B-1*
Dimensions and connection *C-1*

Masterpact NT06 to NT16 **D-2**
Fixed and drawout devices D-2

Masterpact NW08 to NW63 **D-4**
Fixed and drawout devices D-4
Earth-fault and earth-leakage protection
Neutral protection - Zone selective interlocking D-6

Masterpact NT and NW **D-8**
Communication D-8

Fixed, electrically operated Masterpact NT and NW **D-10**
Wiring of the COM option (with BCM ULP) D-10

Withdrawable Masterpact NT and NW **D-11**
Wiring of the COM option (with CCM) D-11

Masterpact NT and NW **D-12**
24 V DC external power supply AD module D-12

Additional characteristics *E-1*
Catalogue numbers and order form *F-1*

Remote-operated source-changeover systems

2 Compact NSX100/630, NS630b/1600 or Masterpact NT/NW devices

Electrical interlocking by the IVE unit

Recommended electrical control system

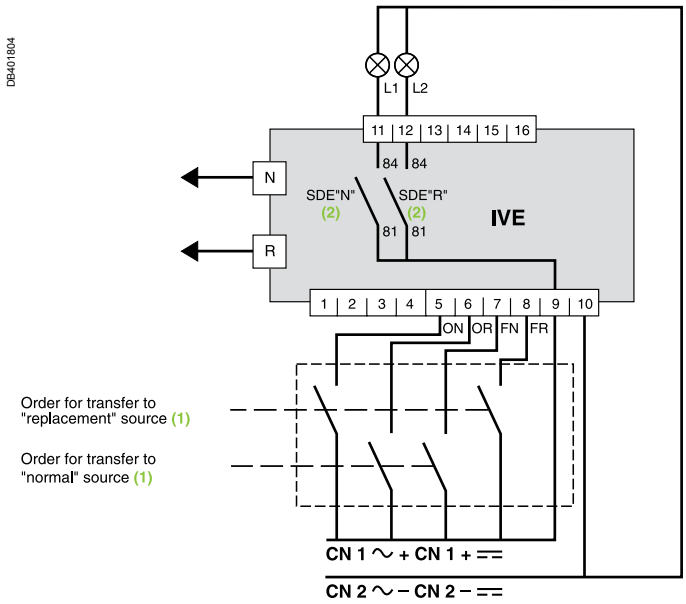

(1) See section "IMPORTANT" here after.
(2) Operating diagram: the SDE "fault-trip" signals are transmitted to the IVE unit. The SDE auxiliary contacts are mounted in the circuit breakers.

IMPORTANT
The relays controlling the "normal" and "replacement" circuit breakers must be mechanically and/or electrically interlocked to prevent them from giving simultaneous closing commands.

Legends
ON *"Normal" source opening order*
OR *"Replacement" source opening order*
FN *"Normal" source closing order*
FR *"Replacement" source closing order*
L1 *"Normal" source "fault-trip" signal*
L2 *"Replacement" source "fault-trip" signal*
N *"Normal" source auxiliary wiring connector*
R *"Replacement" source auxiliary wiring connector*

Note:
diagram shown with circuits de-energised, circuit breakers open and relays in normal position.

2 Compact NSX100/630 devices
Diagram no. 51201177

Source-changeover system without automatic-control system

Without auxiliaries for emergency off

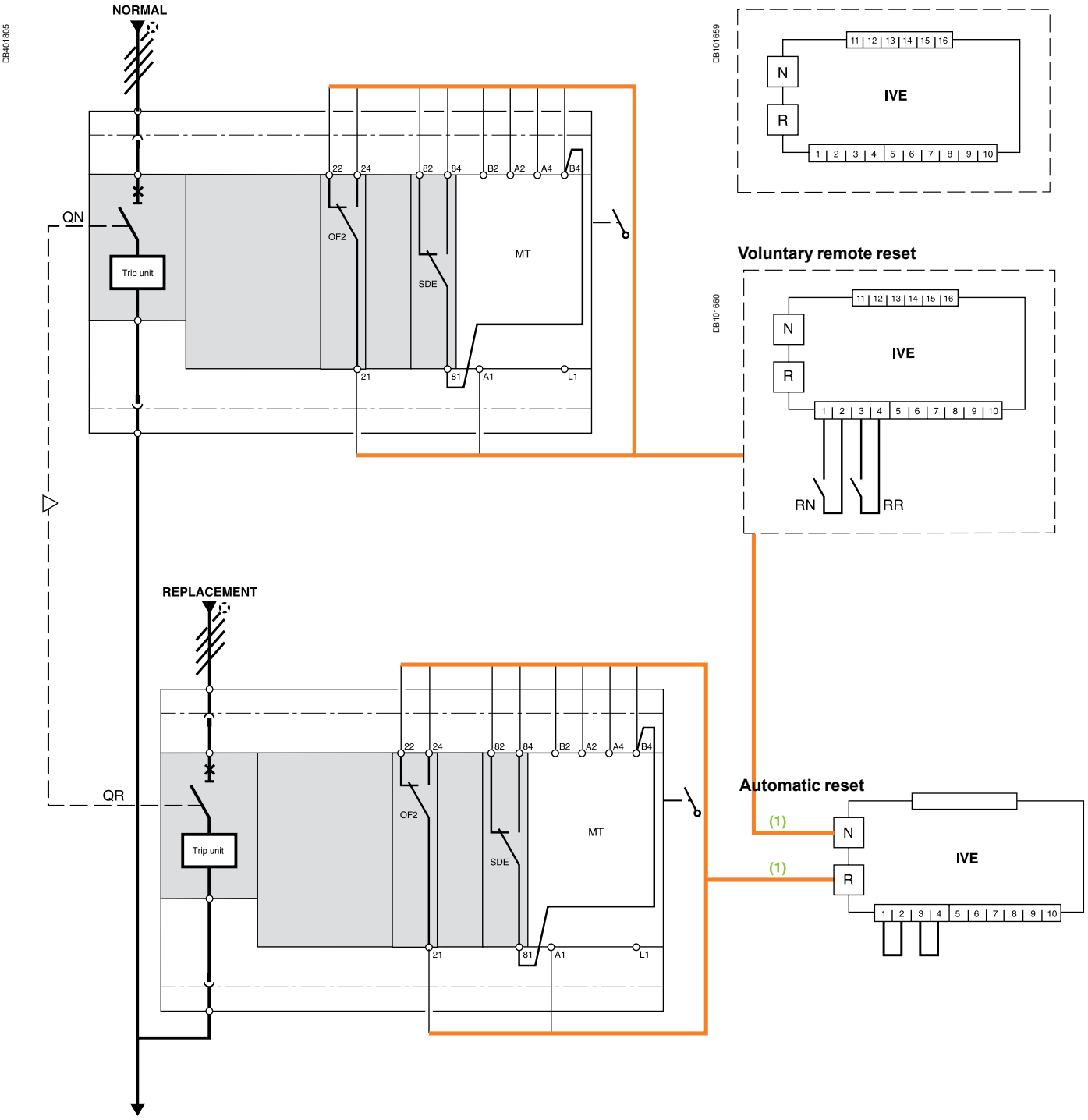

(1) Prefabricated wiring: cannot be modified.

Legends

QN *"Normal" source Compact NSX equipped with motor mechanism*
QR *"Replacement" source Compact NSX equipped with motor mechanism*
SDE *"fault-trip" indication contact*
IVE *electrical interlocking and terminal block unit*
MT *motor mechanism*
OF2 *breaker ON/OFF indication contact*
RN *reset order for breaker QN*
RR *reset order for breaker QR*

States permitted by mechanical interlocking system

Normal	Replacement
0	0
1	0
0	1

Note:
diagram shown with circuits de-energised, circuit breakers open and relays in normal position.

Remote-operated source-changeover systems

2 Compact NSX100/630 devices

Diagram no. 51201178

Source-changeover system without automatic-control system

With emergency off by MN release and automatic reset

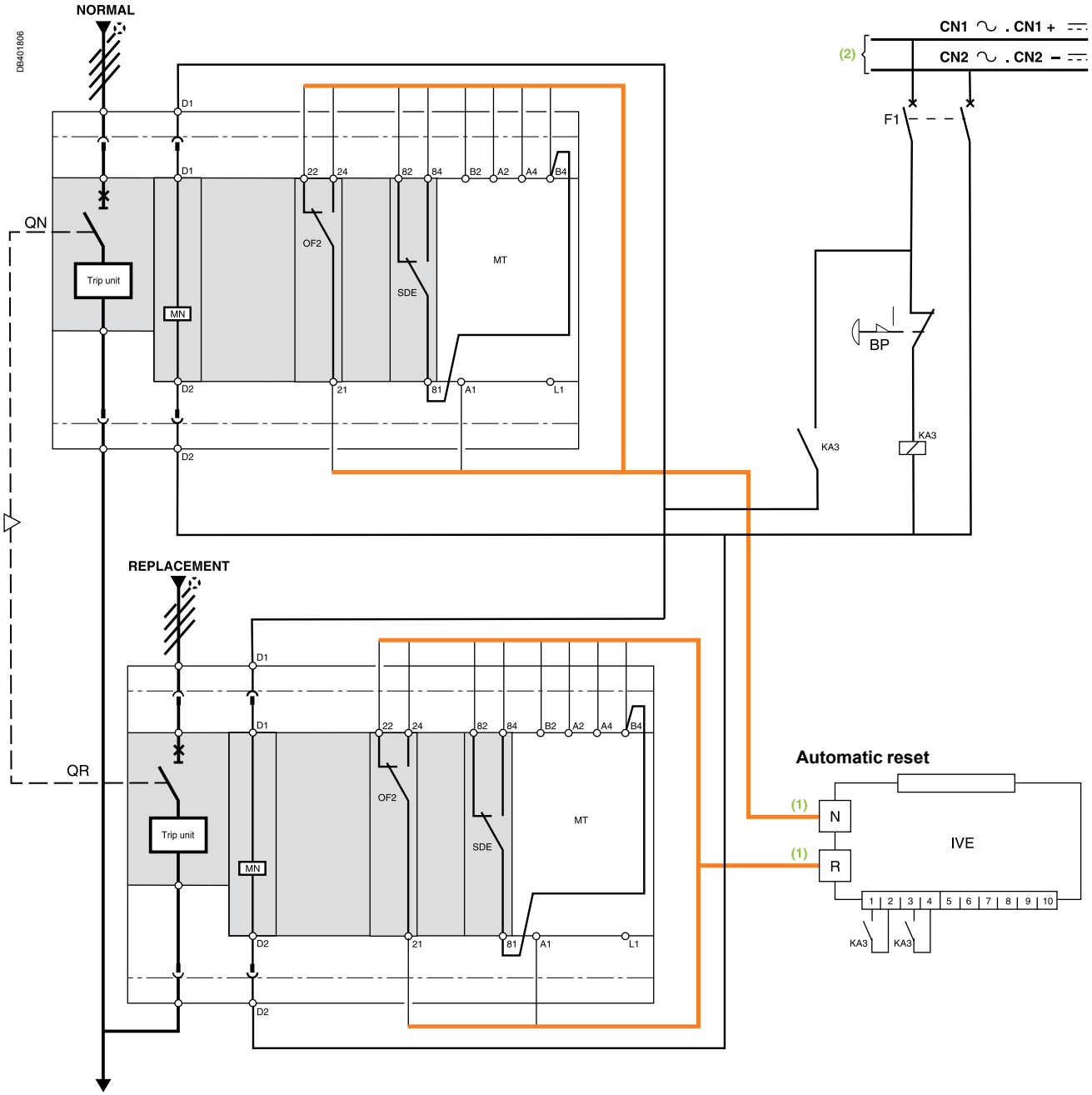

(1) Prefabricated wiring supplied.
(2) Independent auxiliary source.

Legends

- ***QN*** *"Normal" source Compact NSX equipped with motormechanism*
- ***QR*** *"Replacement" source Compact NSX equipped with motor mechanism*
- ***MN*** *undervoltage release*
- ***OF2*** *breaker ON/OFF indication contact*
- ***SDE*** *"fault-trip" indication contact*
- ***MT*** *motor mechanism*
- ***IVE*** *electrical interlocking and terminal block unit*
- ***BP*** *emergency off button with latching*
- ***KA3*** *auxiliary relay*
- ***F1*** *auxiliary power supply circuit breaker*

States permitted by mechanical interlocking system

Normal	Replacement
0	0
1	0
0	1

Note:
after a fault trip, the breaker must be reset manually by pressing its reset button.
Diagram shown with circuits de-energised, circuit breakers open and relays in normal position.

2 Compact NSX100/630 devices
Diagram no. 51201179

Source-changeover system without automatic-control system

With emergency off by MX release and automatic reset

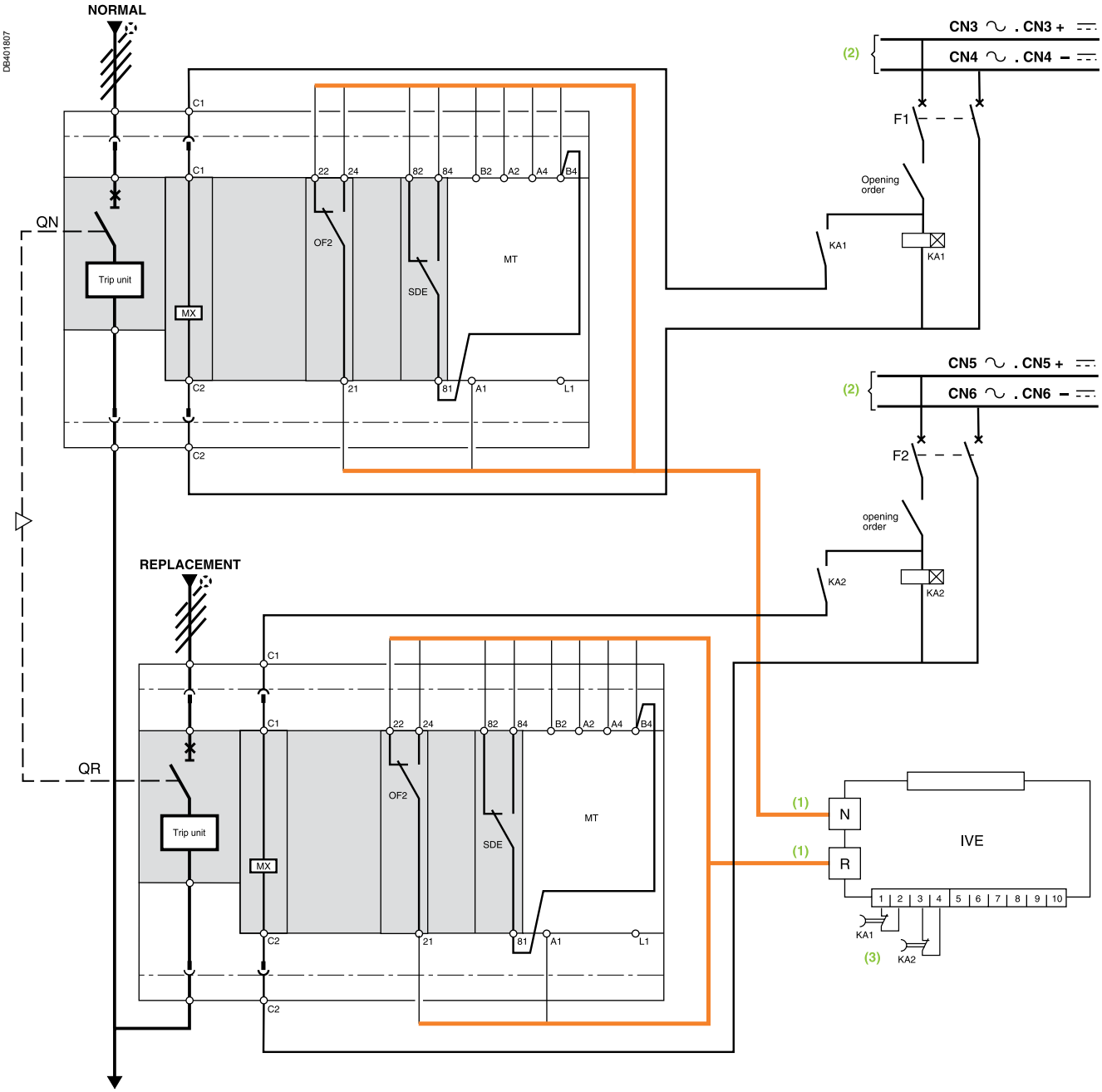

(1) Prefabricated wiring supplied
(2) This source can be:
- *the source present in the case of voltage monitoring*
- *an independent source.*
  In this case, the MX release must be protected.

(3) The reset orders must be delayed by 0.3 seconds.

Legends

QN *"Normal" source Compact NSX equipped with motor mechanism*
QR *"Replacement" source Compact NSX equipped with motor mechanism*
SDE *"fault-trip" indication contact*
OF2 *breaker ON/OFF indication contact*
MX *shunt release*
MT *motor mechanism*
IVE *electrical interlocking and terminal block unit*
KA1 *time-delayed auxiliary relays*
KA2 *time-delayed auxiliary relays*
F1 *auxiliary power supply circuit breaker*
F2 *auxiliary power supply circuit breaker*

States permitted by mechanical interlocking system

Normal	Replacement
0	0
1	0
0	1

Note:
after a fault trip, the breaker must be reset manually by pressing its reset button.
Diagram shown with circuits de-energised, circuit breakers open and relays in normal position.

Schneider Electric

Remote-operated source-changeover systems

2 Compact NS630b/1600 devices

Diagram no. 51201180

Electrical interlocking

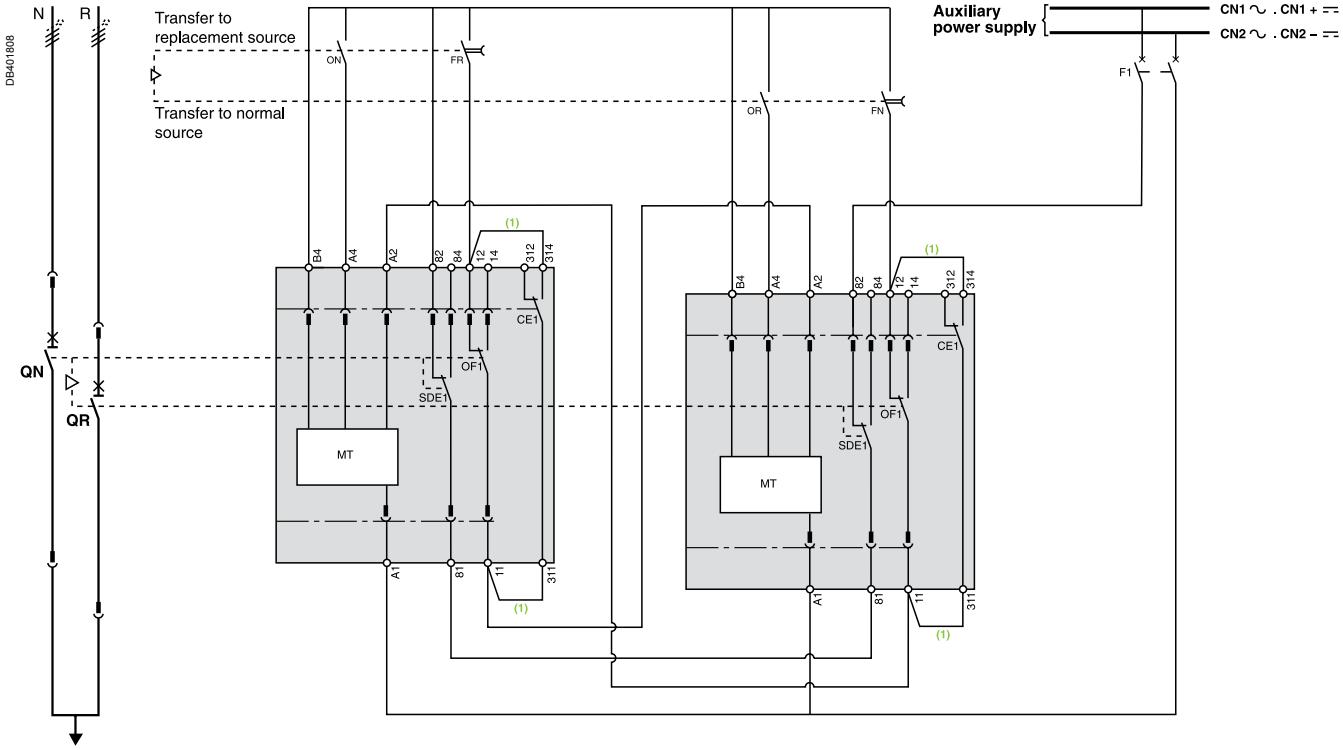

ATTENTION

The diagram shows the electrical wiring for circuit breakers. When wiring the SDE with **switch-disconnectors, connect the SDE to terminals 81 and 84.**

(1) Not to be wired on fixed version.

Legends

QN	*"Normal" source Compact NS630b to 1600*
QR	*"Replacement" source Compact NS630b to 1600*
OF...	*breaker ON/OFF indication contact*
SDE1	*"fault-trip" indication contact*
CE1	*"connected-position" indication contact (carriage switch)*
F1	*auxiliary power supply circuit breaker*
ON	*"Normal" source opening order*
OR	*"Replacement" source opening order*
FN	*"Normal" source closing order (0.25 second delay)*
FR	*"Replacement" source closing order (0.25 second delay)*
MT	*Motor Mechanism*

States permitted by mechanical interlocking system

Normal	Replacement
0	0
1	0
0	1

Note:
after a fault trip, the breaker must be reset manually by pressing its reset button.
Diagram shown with circuit breakers in connected position, open, charged, and ready to close.
Auxiliary power supply = supply voltage of auxiliary relays (KA...) = supply voltage of electrical auxiliaries (electrical operation, MCH, MX, MN...).

2 Compact NS630b/1600 devices
Diagram no. 51201181

Electrical interlocking with emergency off by shunt release

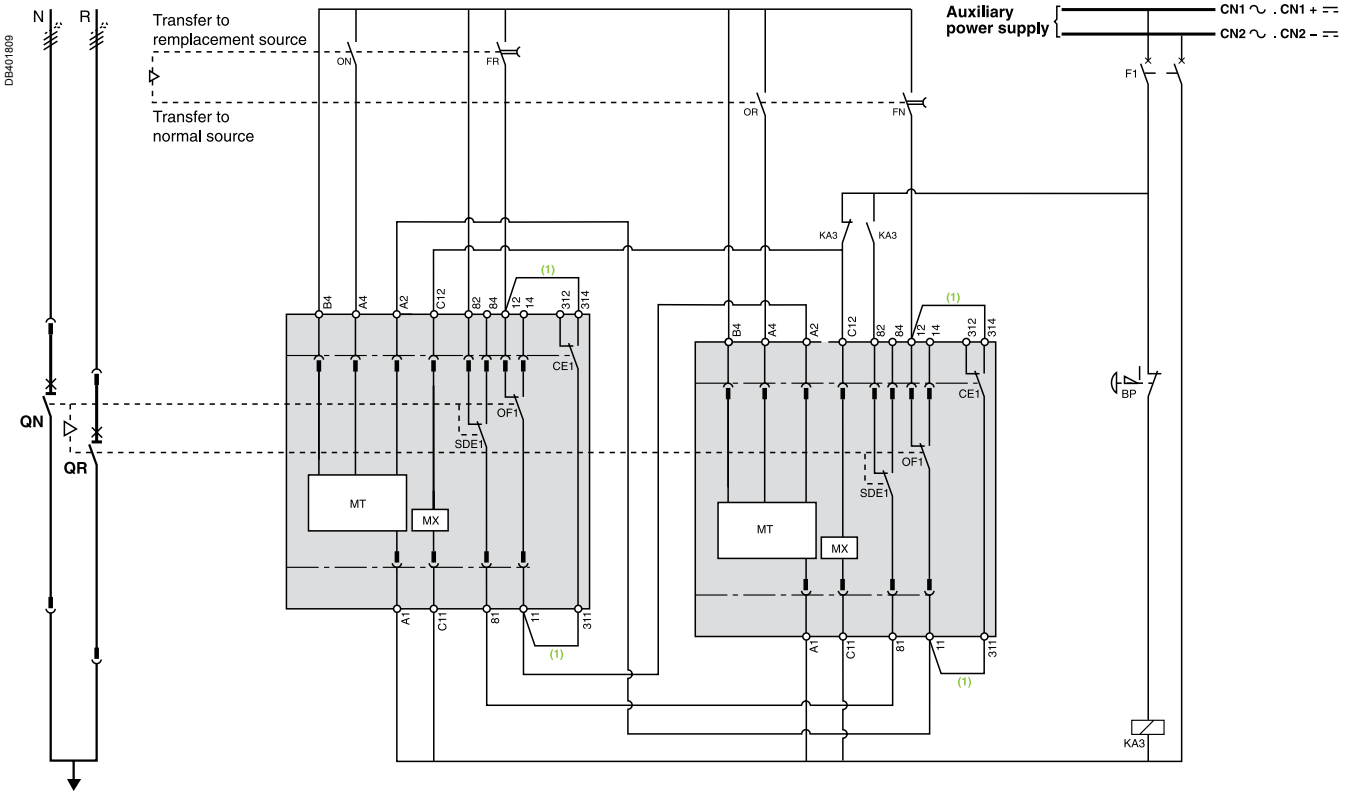

ATTENTION
The diagram shows the electrical wiring for circuit breakers. When wiring the SDE with **switch-disconnectors, connect the SDE to terminals 81 and 84.**

(1) Not to be wired on fixed version.

Legends

QN	*"Normal" source Compact NS630b to 1600*
QR	*"Replacement" source Compact NS630b to 1600*
OF...	*breaker ON/OFF indication contact*
SDE1	*"fault-trip" indication contact*
CE1	*"connected-position" indication contact (carriage switch)*
F1	*auxiliary power supply circuit breaker*
MX	*shunt release*
BP	*emergency off button with latching*
KA3	*auxiliary relay*
ON	*"Normal" source opening order*
OR	*"Replacement" source opening order*
FN	*"Normal" source closing order (0.25 second delay)*
FR	*"Replacement" source closing order (0.25 second delay)*
MT	*Motor Mechanism*

States permitted by mechanical interlocking system

Normal	Replacement
0	0
1	0
0	1

Note:
after a fault trip, the breaker must be reset manually by pressing its reset button.
Diagram shown with circuit breakers in connected position, open, charged, and ready to close.
Auxiliary power supply = supply voltage of auxiliary relays (KA...) = supply voltage of electrical auxiliaries (electrical operation, MCH, MX, MN...).

Remote-operated source-changeover systems

2 Compact NS630b/1600 devices

Diagram no. 51201182

Electrical interlocking with emergency off by undervoltage

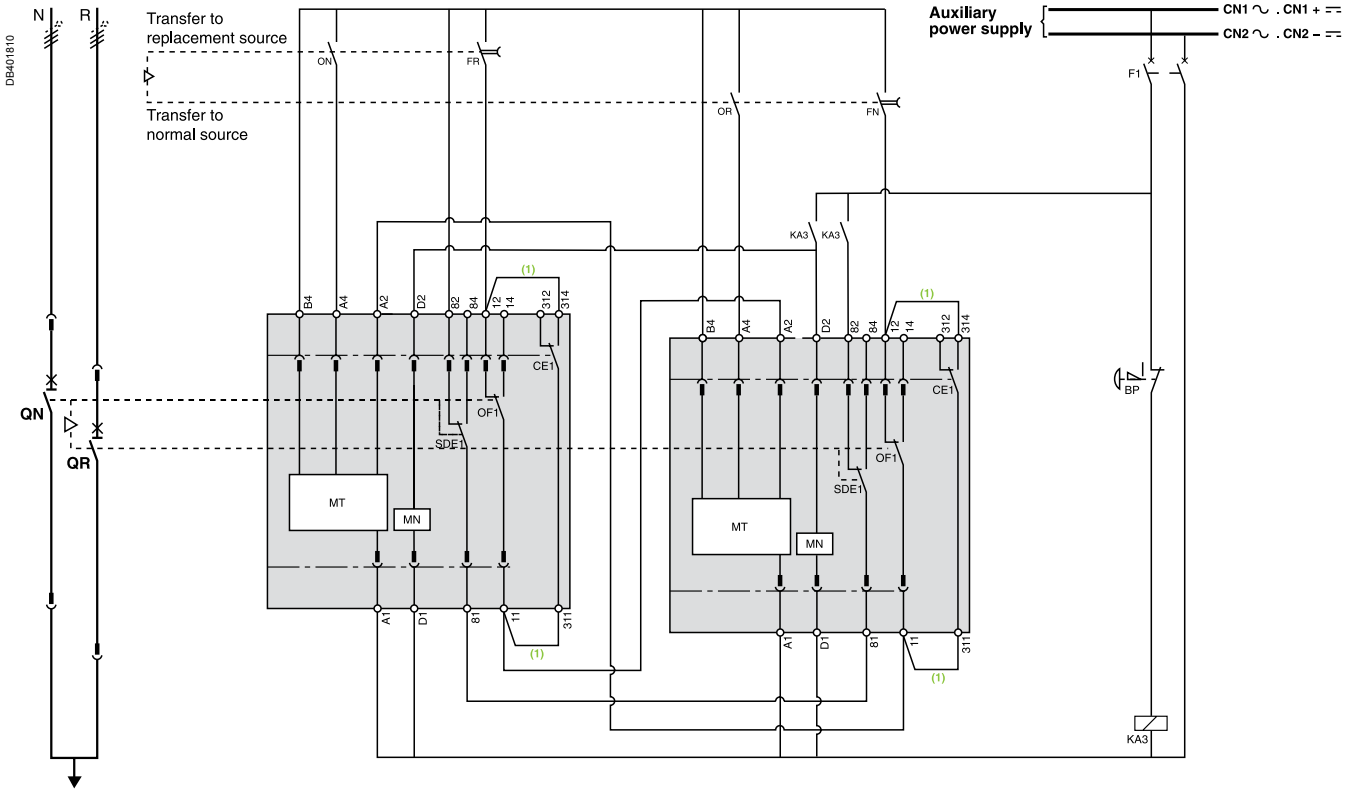

ATTENTION
The diagram shows the electrical wiring for circuit breakers. When wiring the SDE with **switch-disconnectors, connect the SDE to terminals 81 and 84.**

(1) Not to be wired on fixed version.

Legends

QN	*"Normal" source Compact NS630b to 1600*
QR	*"Replacement" source Compact NS630b to 1600*
OF..	*breaker ON/OFF indication contact*
SDE1	*"fault-trip" indication contact*
CE1	*"connected-position" indication contact (carriage switch)*
F1	*auxiliary power supply circuit breaker*
MN	*undervoltage release*
BP	*emergency off button with latching*
KA3	*auxiliary relay*
ON	*"Normal" source opening order*
OR	*"Replacement" source opening order*
FN	*"Normal" source closing order (0.25 second delay)*
FR	*"Replacement" source closing order (0.25 second delay)*
MT	*Motor Mechanism*

Wiring colour codes

RD	GN	BK	VT	YE	GY	WH	BN
red	green	black	violet	yellow	grey	white	brown

States permitted by mechanical interlocking system

Normal	Replacement
0	0
1	0
0	1

Note:
after a fault trip, the breaker must be reset manually by pressing its reset button.
Diagram shown with circuit breakers in connected position, open, charged, and ready to close.
Auxiliary power supply = supply voltage of auxiliary relays (KA...) = supply voltage of electrical auxiliaries (electrical operation, MCH, MX, MN...).

2 Compact NS630b/1600 devices
Diagram no. 51201183

Electrical interlocking by IVE unit

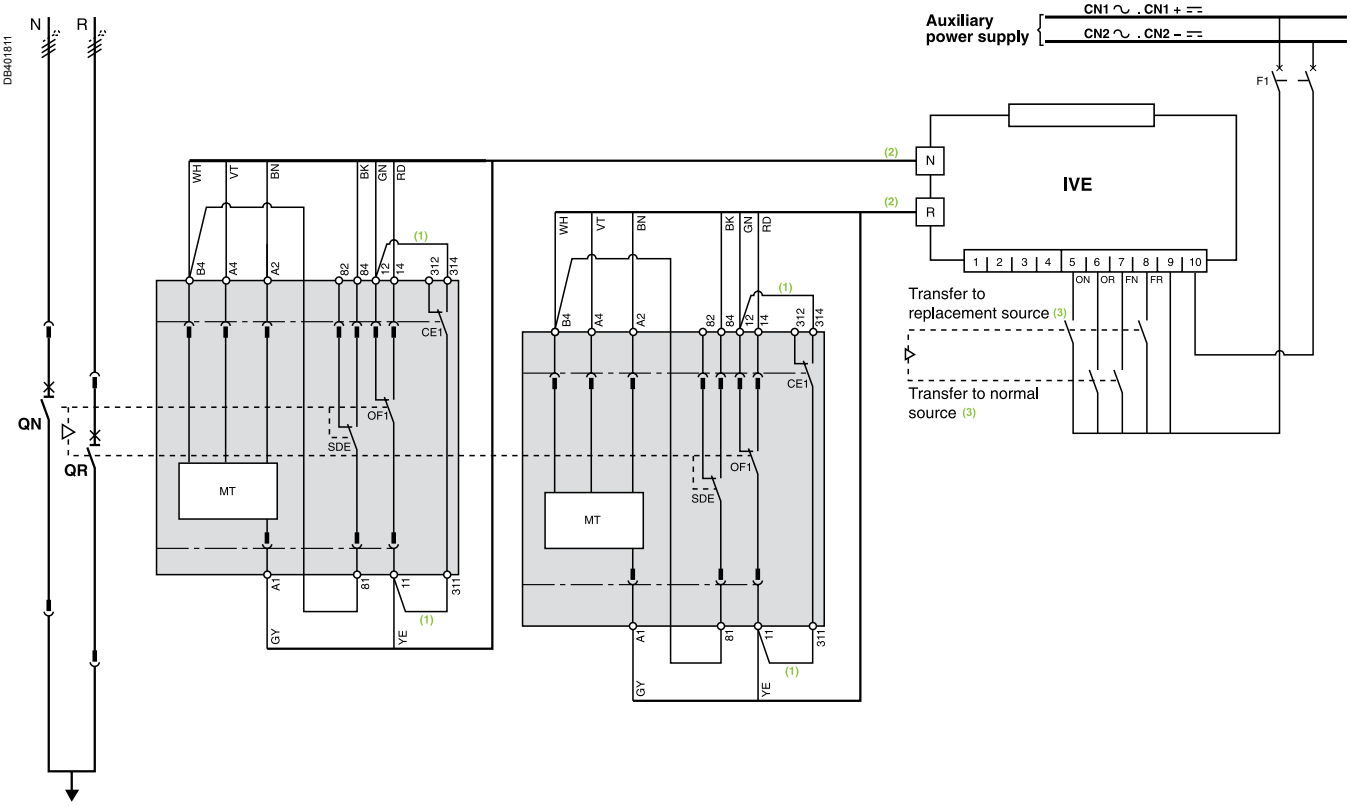

ATTENTION
The diagram shows the electrical wiring for circuit breakers. When wiring the SDE with **switch-disconnectors, connect wire BK to terminal 82.**

(1) Not to be wired on fixed version.
(2) Prefabricated wiring supplied.
(3) See section "IMPORTANT" here after.

IMPORTANT
The relays controlling the "normal" and "replacement" circuit breakers must be mechanically and/or electrically interlocked to prevent them from giving simultaneous closing commands.

Legends

QN	*"Normal" source Compact NS630b to 1600*
QR	*"Replacement" source Compact NS630b to 1600*
OF...	*breaker ON/OFF indication contact*
SDE1	*"fault-trip" indication contact*
CE1	*"connected-position" indication contact (carriage switch)*
F1	*auxiliary power supply circuit breaker*
IVE	*electrical interlocking and terminal block unit*
ON	*"Normal" source opening order*
OR	*"Replacement" source opening order*
FN	*"Normal" source closing order (0.25 second delay)*
FR	*"Replacement" source closing order (0.25 second delay)*
MT	*Motor Mechanism*

Wiring colour codes

RD	GN	BK	VT	YE	GY	WH	BN
red	green	black	violet	yellow	grey	white	brown

States permitted by mechanical interlocking system

Normal	Replacement
0	0
1	0
0	1

Note:
after a fault trip, the breaker must be reset manually by pressing its reset button.
Diagram shown with circuit breakers in connected position, open, charged, and ready to close.
Auxiliary power supply = supply voltage of auxiliary relays (KA...) = supply voltage of electrical auxiliaries (electrical operation, MCH, MX, MN...).

Schneider Electric

Remote-operated source-changeover systems

2 Compact NS630b/1600 devices

Diagram no. 51201184

Electrical interlocking by IVE unit with emergency off by shunt release

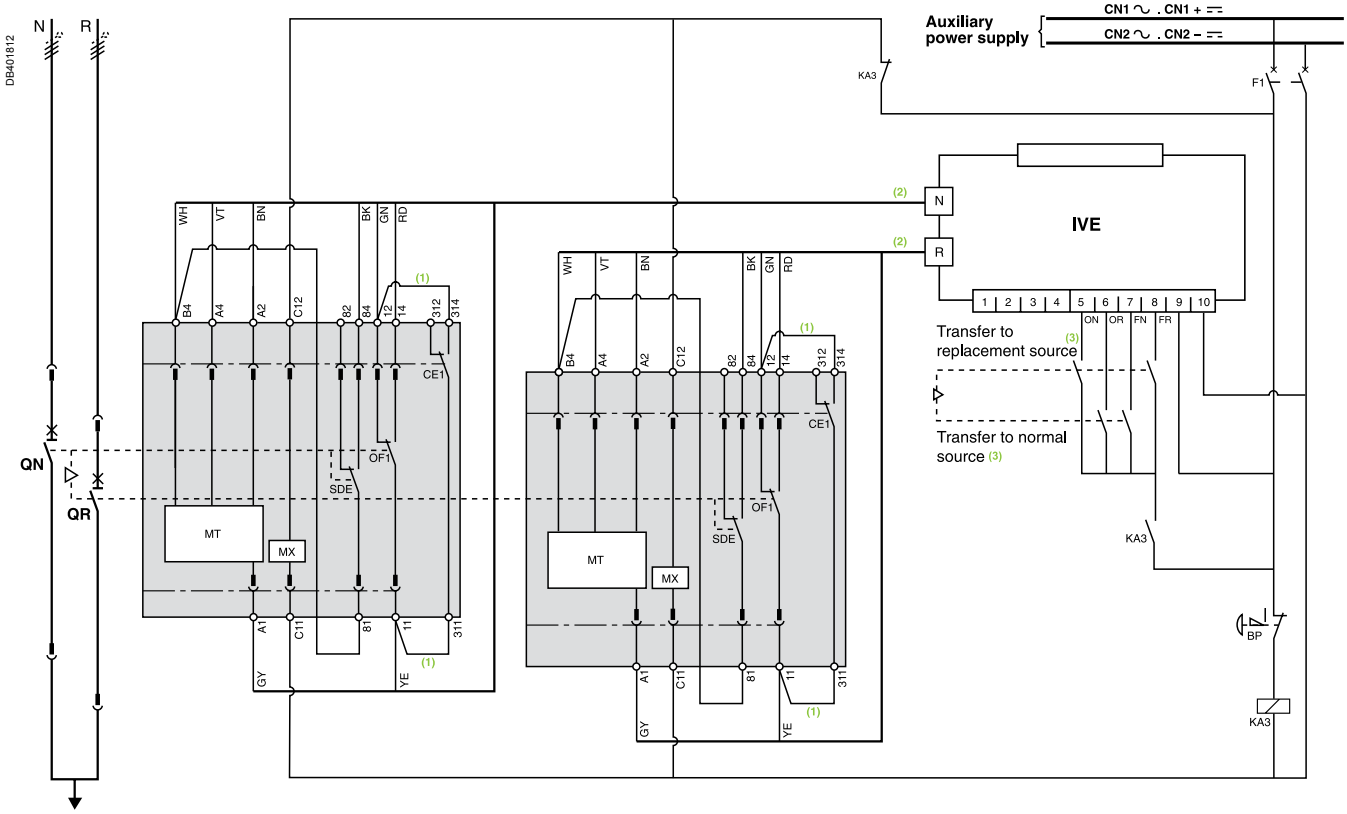

ATTENTION
The diagram shows the electrical wiring for circuit breakers. When wiring the SDE with **switch-disconnectors, connect wire BK to terminal 82.**

(1) Not to be wired on fixed version.
(2) Prefabricated wiring supplied.
(3) See section "IMPORTANT" here after.

IMPORTANT

The relays controlling the "normal" and "replacement" circuit breakers must be mechanically and/or electrically interlocked to prevent them from giving simultaneous closing commands.

Legends

QN	*"Normal" source Compact NS630b to 1600*
QR	*"Replacement" source Compact NS630b to 1600*
OF..	*breaker ON/OFF indication contact*
SDE1	*"fault-trip" indication contact*
CE1	*"connected-position" indication contact (carriage switch)*
F1	*auxiliary power supply circuit breaker*
IVE	*electrical interlocking and terminal block unit*
MX	*shunt release*
BP	*emergency off button with latching*
KA3	*auxiliary relay*
ON	*"Normal" source opening order*
OR	*"Replacement" source opening order*
FN	*"Normal" source closing order (0.25 second delay)*
FR	*"Replacement" source closing order (0.25 second delay)*
MT	*Motor Mechanism*

Wiring colour codes

RD	GN	BK	VT	YE	GY	WH	BN
red	green	black	violet	yellow	grey	white	brown

States permitted by mechanical interlocking system

Normal	Replacement
0	0
1	0
0	1

Note:
after a fault trip, the breaker must be reset manually by pressing its reset button.
Diagram shown with circuit breakers in connected position, open, charged, and ready to close.
Auxiliary power supply = supply voltage of auxiliary relays (KA...) = supply voltage of electrical auxiliaries (electrical operation, MCH, MX, MN...).

2 Compact NS630b/1600 devices
Diagram no. 51201185

Electrical interlocking by IVE unit with emergency off by undervoltage release

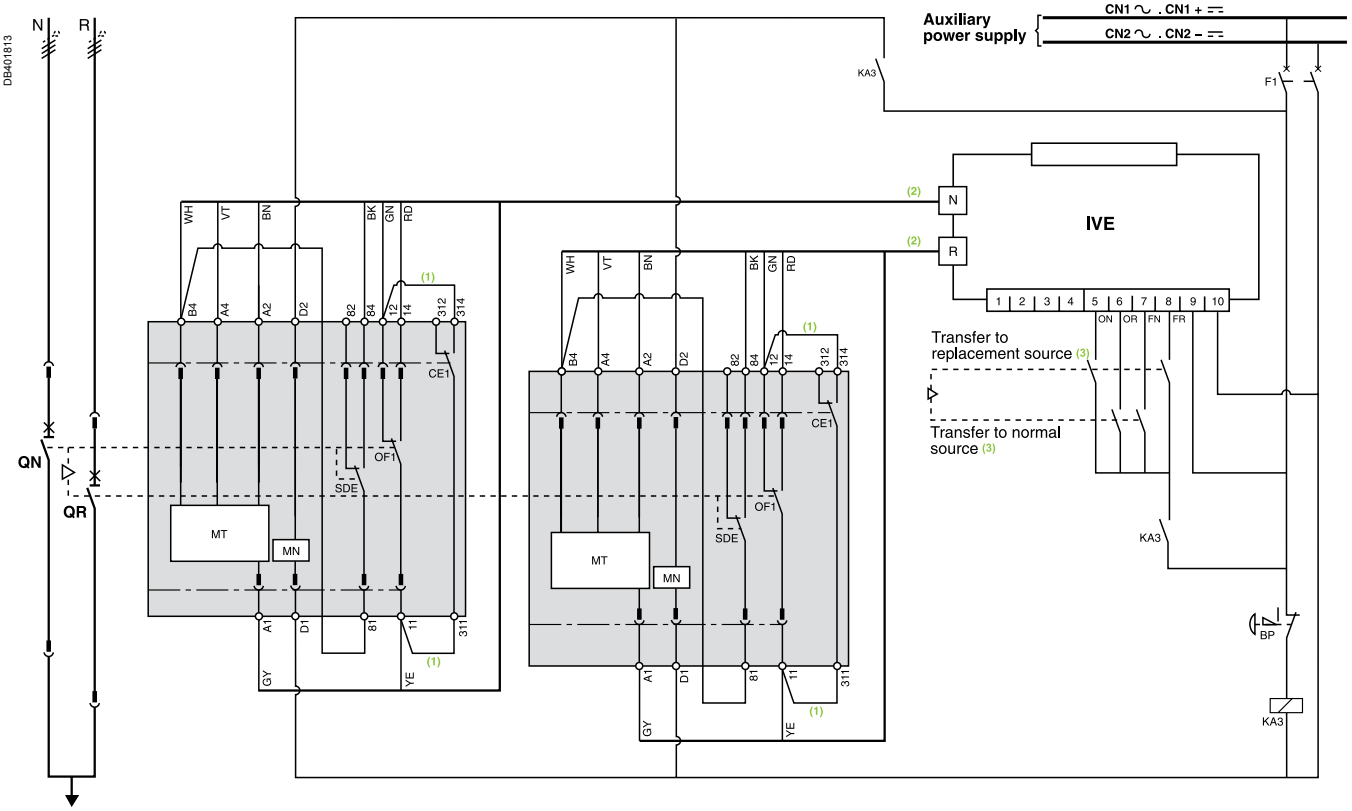

ATTENTION
The diagram shows the electrical wiring for circuit breakers. When wiring the SDE with **switch-disconnectors, connect wire BK to terminal 82.**

(1) Not to be wired on fixed version.
(2) Prefabricated wiring supplied.
(3) See section "IMPORTANT" here after.

IMPORTANT
The relays controlling the "normal" and "replacement" circuit breakers must be mechanically and/or electrically interlocked to prevent them from giving simultaneous closing commands.

Legends

QN	*"Normal" source Compact NS630b to 1600*
QR	*"Replacement" source Compact NS630b to 1600*
MCH	*spring-charging motor*
MX	*standard opening release*
XF	*standard closing release*
OF...	*breaker ON/OFF indication contact*
SDE1	*"fault-trip" indication contact*
CE1	*"connected-position" indication contact (carriage switch)*
F1	*auxiliary power supply circuit breaker*
IVE	*electrical interlocking and terminal block unit*
MN	*undervoltage release*
BP	*emergency off button with latching*
KA3	*auxiliary relay*
ON	*"Normal" source opening order*
OR	*"Replacement" source opening order*
FN	*"Normal" source closing order (0.25 second delay)*
FR	*"Replacement" source closing order (0.25 second delay)*
MT	*Motor Mechanism*

Wiring colour codes

RD	GN	BK	VT	YE	GY	WH	BN
red	green	black	violet	yellow	grey	white	brown

States permitted by mechanical interlocking system

Normal	Replacement
0	0
1	0
0	1

Note:
after a fault trip, the breaker must be reset manually by pressing its reset button.
Diagram shown with circuit breakers in connected position, open, charged, and ready to close.
Auxiliary power supply = supply voltage of auxiliary relays (KA...) = supply voltage of electrical auxiliaries (electrical operation, MCH, MX, MN...).

Schneider Electric

Remote-operated source-changeover systems

2 Compact NS630b/1600 devices

Diagram no. 51201186

Automatic-control system without IVE unit for permanent replacement source

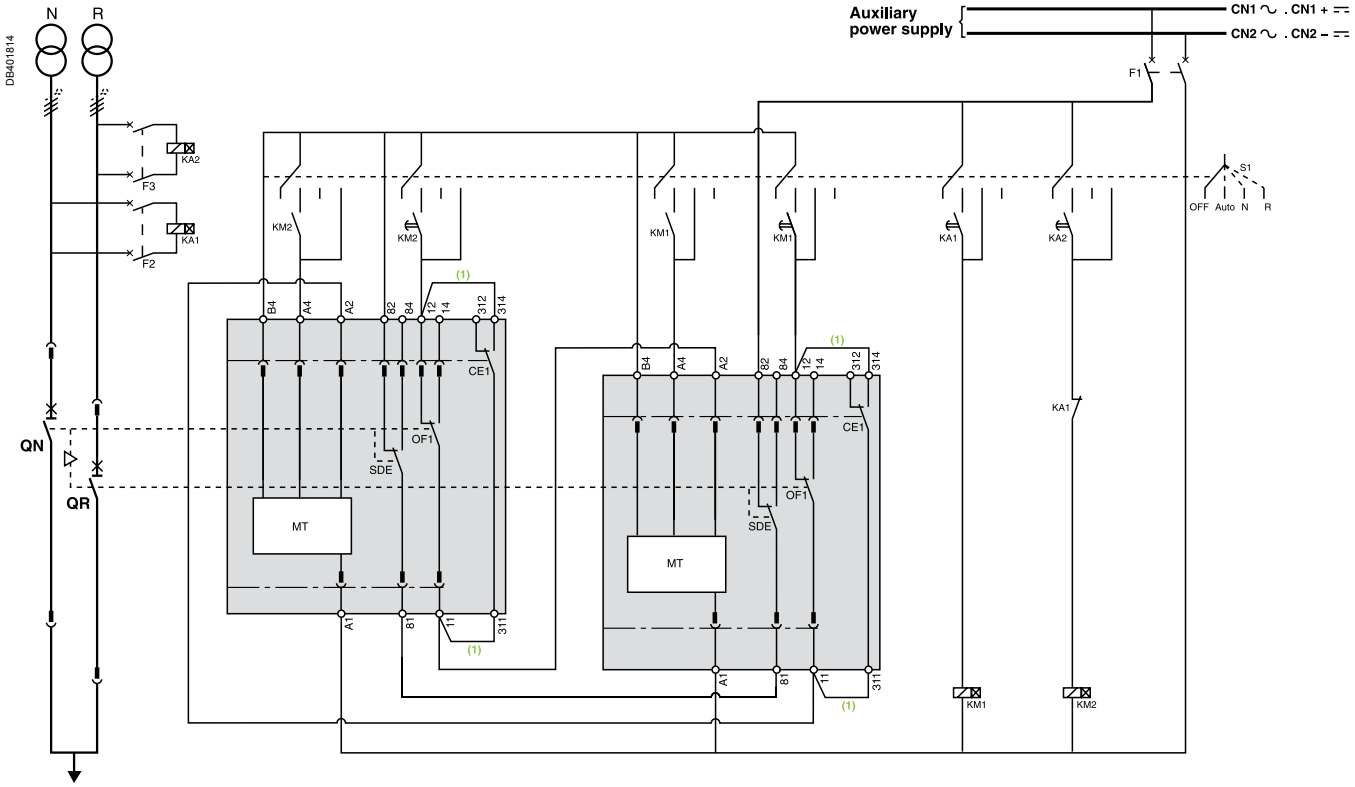

ATTENTION
The diagram shows the electrical wiring for circuit breakers. When wiring the SDE with **switch-disconnectors, connect the SDE to terminals 81 and 84.**

(1) Not to be wired on fixed version.

Legends

QN	*Normal" source Compact NS630b to 1600*
QR	*"Replacement" source Compact NS630b to 1600*
OF..	*breaker ON/OFF indication contact*
SDE1	*"fault-trip" indication contact*
CE1	*"connected-position" indication contact (carriage switch)*
F1	*auxiliary power supply circuit breaker*
F2/F3	*circuit breaker (high breaking capacity)*
S1	*control switches*
KA1	*auxiliary relays - UN presence detection*
KA2	*auxiliary relays - UR presence detection*
KM1	*contactors with 0.25 second delay (for transfer to "Replacement" source)*
KM2	*contactors with 0.25 second delay (for transfer to "Normal" source)*
MT	*Motor Mechanism*

States permitted by mechanical interlocking system

Normal	Replacement
0	0
1	0
0	1

Note:
after a fault trip, the breaker must be reset manually by pressing its reset button.
Diagram shown with circuit breakers in connected position, open, charged, and ready to close.
Auxiliary power supply = supply voltage of auxiliary relays (KA...) = supply voltage of electrical auxiliaries (electrical operation, MCH, MX, MN...).

2 Compact NS630b/1600 devices
Diagram no. 51201187

Automatic-control system for replacement source generator set

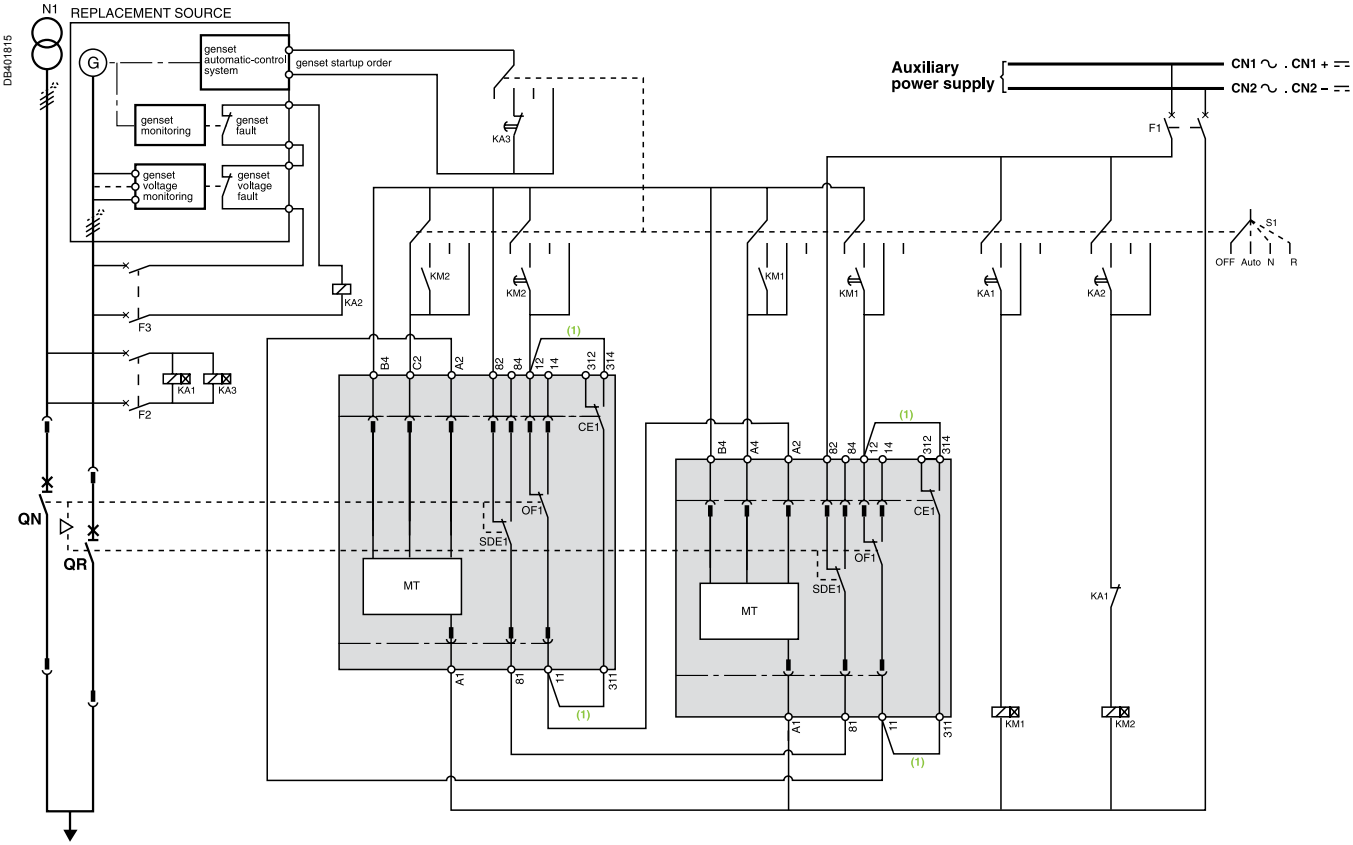

ATTENTION
The diagram shows the electrical wiring for circuit breakers. When wiring the SDE with **switch-disconnectors, connect the SDE to terminals 81 and 84.**

(1) Not to be wired on fixed version.

Legends

QN	*"Normal" source Compact NS630b to 1600*
QR	*"Replacement" source Compact NS630b to 1600*
OF...	*breaker ON/OFF indication contact*
SDE1	*"fault-trip" indication contact*
CE1	*"connected-position" indication contact (carriage switch)*
F1	*auxiliary power supply circuit breaker*
F2/F3	*circuit breaker (high breaking capacity)*
S1	*control switches*
KA1	*auxiliary relays - UN presence detection*
KA2	*auxiliary relays - UR presence detection*
KA3	*auxiliary relays - generator set startup if UN absent*
KM1	*contactors with 0.25 second delay (for transfer to "Replacement" source)*
KM2	*contactors with 0.25 second delay (for transfer to "Normal" source)*
MT	*Motor Mechanism*

Wiring colour codes

RD	GN	BK	VT	YE	GY	WH	BN
red	green	black	violet	yellow	grey	white	brown

States permitted by mechanical interlocking system

Normal	Replacement
0	0
1	0
0	1

Note:
after a fault trip, the breaker must be reset manually by pressing its reset button.
Diagram shown with circuit breakers in connected position, open, charged, and ready to close.
Auxiliary power supply = supply voltage of auxiliary relays (KA...) = supply voltage of electrical auxiliaries (electrical operation, MCH, MX, MN...).

Schneider Electric

Remote-operated source-changeover systems

2 Masterpact NT or NW devices

Diagram no. 51201139

Electrical interlocking with lockout after a fault

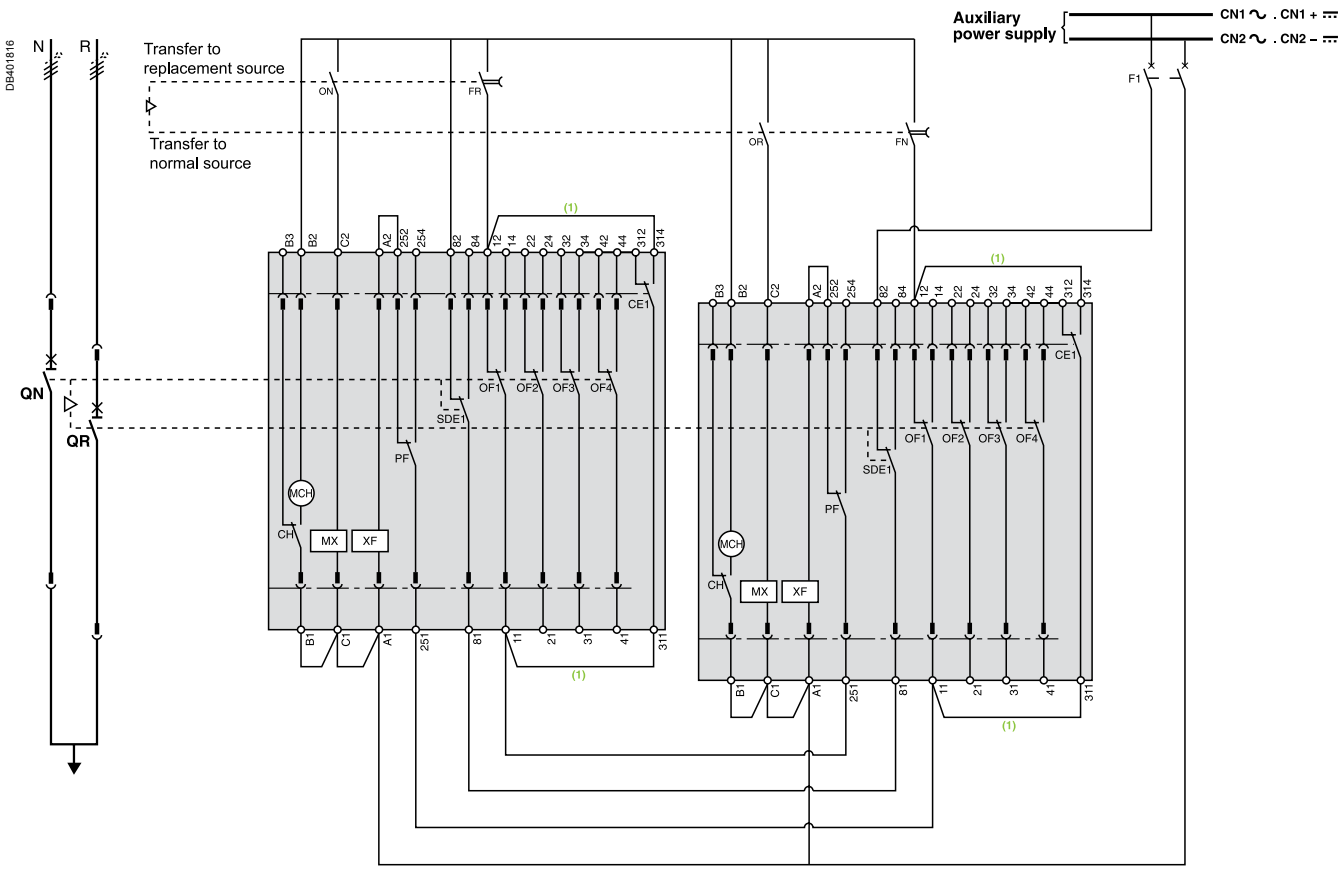

ATTENTION
The diagram shows the electrical wiring for circuit breakers. When wiring the SDE with **switch-disconnectors, connect the SDE to terminals 81 and 84.**

(1) Not to be wired on fixed version.

Legends

QN	*"Normal" source Masterpact NT or NW*
QR	*"Replacement" source Masterpact NT or NW*
MCH	*spring-charging motor*
MX	*standard opening voltage release*
XF	*standard closing voltage release*
OF..	*breaker ON/OFF indication contact*
SDE1	*"fault-trip" indication contact*
PF	*"ready-to-close" contact*
CE1	*"connected-position" indication contact (carriage switch)*
CH	*"springs charged" indication contact*
F1	*auxiliary power supply circuit breaker*
ON	*"Normal" source opening order*
OR	*"Replacement" source opening order*
FN	*"Normal" source closing order (0.25 second delay)*
FR	*"Replacement" source closing order (0.25 second delay)*

States permitted by mechanical interlocking system

Normal	Replacement
0	0
1	0
0	1

Note:
diagram shown with circuit breakers in connected position, open, charged, and ready to close.
Auxiliary power supply = supply voltage of auxiliary relays (KA...) = supply voltage of electrical auxiliaries (electrical operation, MCH, MX, MN...).

2 Masterpact NT or NW devices
Diagram no. 51201140

Electrical interlocking with lockout after a fault and emergency off by shunt release

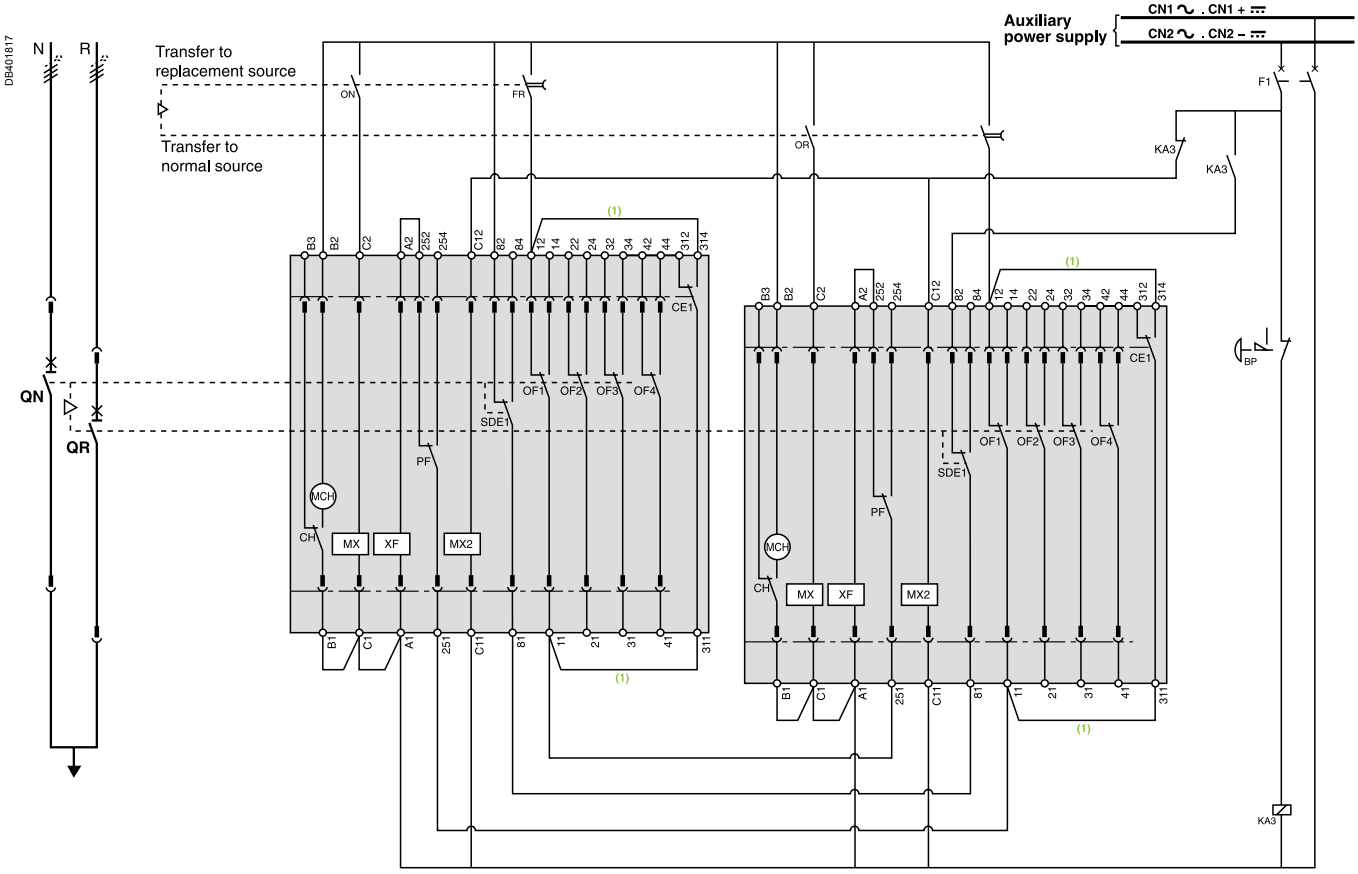

ATTENTION

The diagram shows the electrical wiring for circuit breakers. When wiring the SDE with **switch-disconnectors, connect the SDE to terminals 81 and 84.**

(1) Not to be wired on fixed version.

Legends

KA3	*time delay for genset startup order to avoid starting the genset for transient UN disturbances*
QN	*"Normal" source Masterpact NT or NW*
QR	*"Replacement" source Masterpact NT or NW*
MCH	*spring-charging motor*
MX	*standard opening voltage release*
XF	*standard closing voltage release*
OF...	*breaker ON/OFF indication contact*
SDE1	*"fault-trip" indication contact*
PF	*"ready-to-close" contact*
CE1	*"connected-position" indication contact (carriage switch)*
CH	*"springs charged" indication contact*
F1	*auxiliary power supply circuit breaker*
MX2	*shunt release*
BP	*emergency off button with latching*
ON	*"Normal" source opening order*
OR	*"Replacement" source opening order*
FN	*"Normal" source closing order (0.25 second delay)*
FR	*"Replacement" source closing order (0.25 second delay)*
BP	*emergency off button with latching*

States permitted by mechanical interlocking system

Normal	Replacement
0	0
1	0
0	1

Note:
diagram shown with circuit breakers in connected position, open, charged, and ready to close.
Auxiliary power supply = supply voltage of auxiliary relays (KA...) = supply voltage of electrical auxiliaries (electrical operation, MCH, MX, MN...).

Schneider Electric

Remote-operated source-changeover systems

2 Masterpact NT or NW devices

Diagram no. 51201141

Electrical interlocking with lockout after a fault and emergency off by undervoltage release

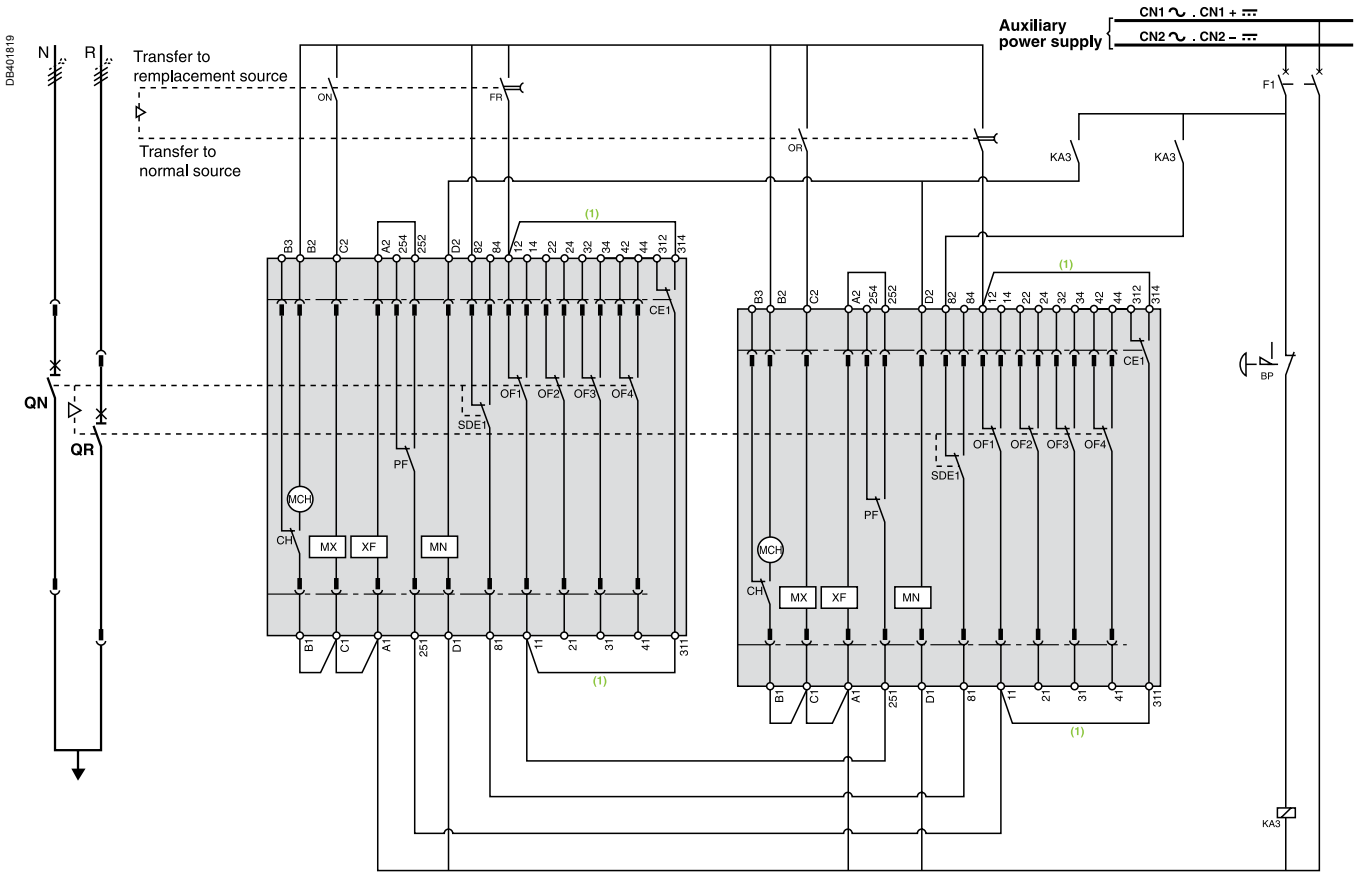

ATTENTION
The diagram shows the electrical wiring for circuit breakers. When wiring the SDE with **switch-disconnectors, connect the SDE to terminals 81 and 84.**

(1) Not to be wired on fixed version.

Legends

QN	*"Normal" source Masterpact NT or NW*
QR	*"Replacement" source Masterpact NT or NW*
MCH	*spring-charging motor*
MX	*standard opening voltage release*
XF	*standard closing voltage release*
MN	*undervoltage release*
OF..	*breaker ON/OFF indication contact*
SDE1	*"fault-trip" indication contact*
PF	*"ready-to-close" contact*
CE1	*"connected-position" indication contact (carriage switch)*
CH	*"springs charged" indication contact*
F1	*auxiliary power supply circuit breaker*
BP	*emergency off button with latching*
S1	*control switches*
KA3	*auxiliary relay*
ON	*"Normal" source opening order*
OR	*"Replacement" source opening order*
FN	*"Normal" source closing order (0.25 second delay)*
FR	*"Replacement" source closing order (0.25 second delay)*

States permitted by mechanical interlocking system

Normal	Replacement
0	0
1	0
0	1

Note:
diagram shown with circuit breakers in connected position, open, charged, and ready to close.
Auxiliary power supply = supply voltage of auxiliary relays (KA...) = supply voltage of electrical auxiliaries (electrical operation, MCH, MX, MN...).

2 Masterpact NT or NW devices
Diagram no. 51201142

Electrical interlocking by IVE unit with lockout after a fault

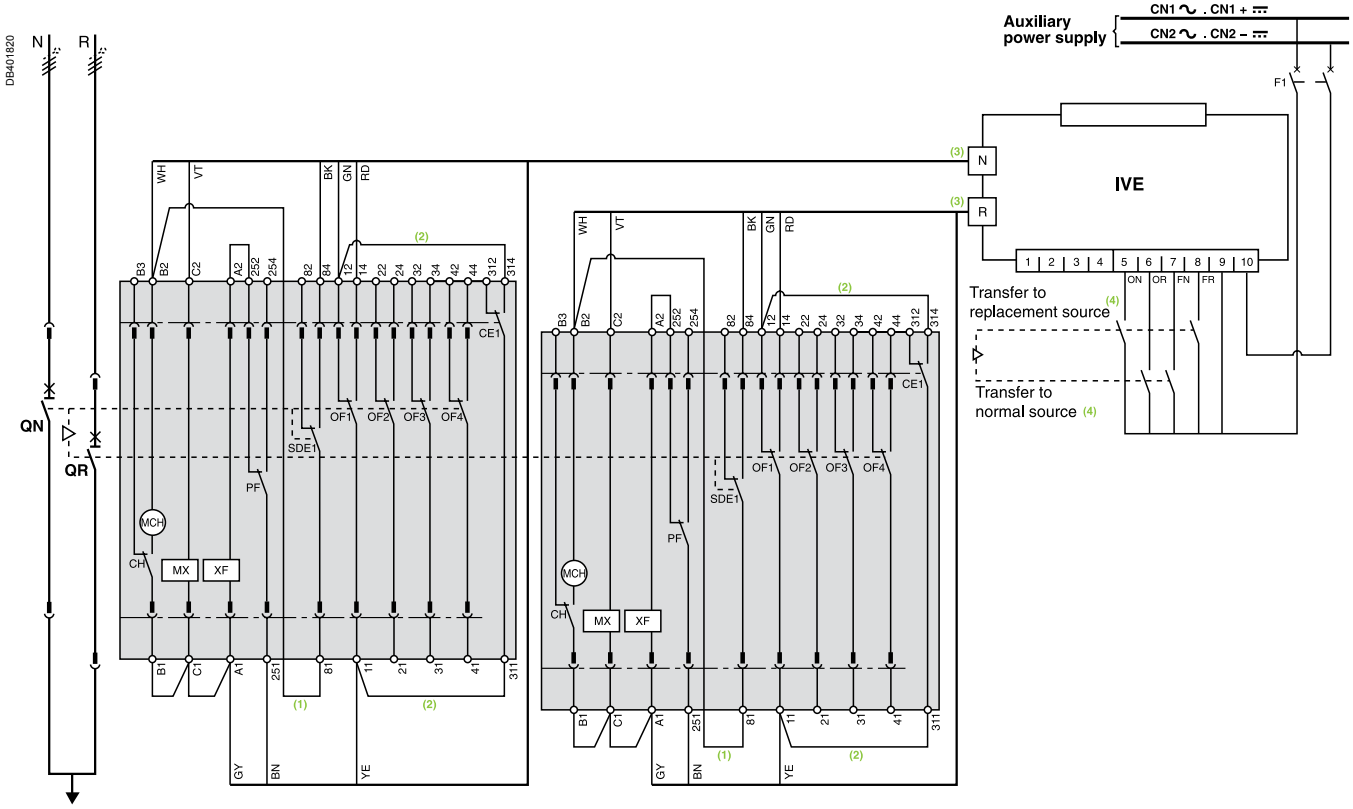

ATTENTION

The diagram shows the electrical wiring for circuit breakers. When wiring the SDE with **switch-disconnectors, connect wire BK to terminal 82.**

(1) Not to be wired for the "without lockout after a fault" solution.
(2) Not to be wired on fixed version.
(3) Prefabricated wiring supplied.
(4) See section "IMPORTANT" here after.

IMPORTANT

The relays controlling the "normal" and "replacement" circuit breakers must be mechanically and/or electrically interlocked to prevent them from giving simultaneous closing commands.

Legends

QN	*"Normal" source Masterpact NT or NW*
QR	*"Replacement" source Masterpact NT or NW*
MCH	*spring-charging motor*
MX	*standard opening voltage release*
XF	*standard closing voltage release*
OF...	*breaker ON/OFF indication contact*
SDE1	*"fault-trip" indication contact*
PF	*"ready-to-close" contact*
CE1	*"connected-position" indication contact (carriage switch)*
CH	*"springs charged" indication contact*
IVE	*electrical interlocking and terminal block unit*
F1	*auxiliary power supply circuit breaker*
ON	*"Normal" source opening order*
OR	*"Replacement" source opening order*
FN	*"Normal" source closing order (0.25 second delay)*
FR	*"Replacement" source closing order (0.25 second delay)*

Wiring colour codes

RD	GN	BK	VT	YE	GY	WH	BN
red	green	black	violet	yellow	grey	white	brown

States permitted by mechanical interlocking system

Normal	Replacement
0	0
1	0
0	1

Note:
diagram shown with circuit breakers in connected position, open, charged, and ready to close.
Auxiliary power supply = supply voltage of auxiliary relays (KA...) = supply voltage of electrical auxiliaries (electrical operation, MCH, MX, MN...).

Remote-operated source-changeover systems

2 Masterpact NT or NW devices

Diagram no. 51201143

Electrical interlocking by IVE unit with lockout after a fault and emergency off by shunt release

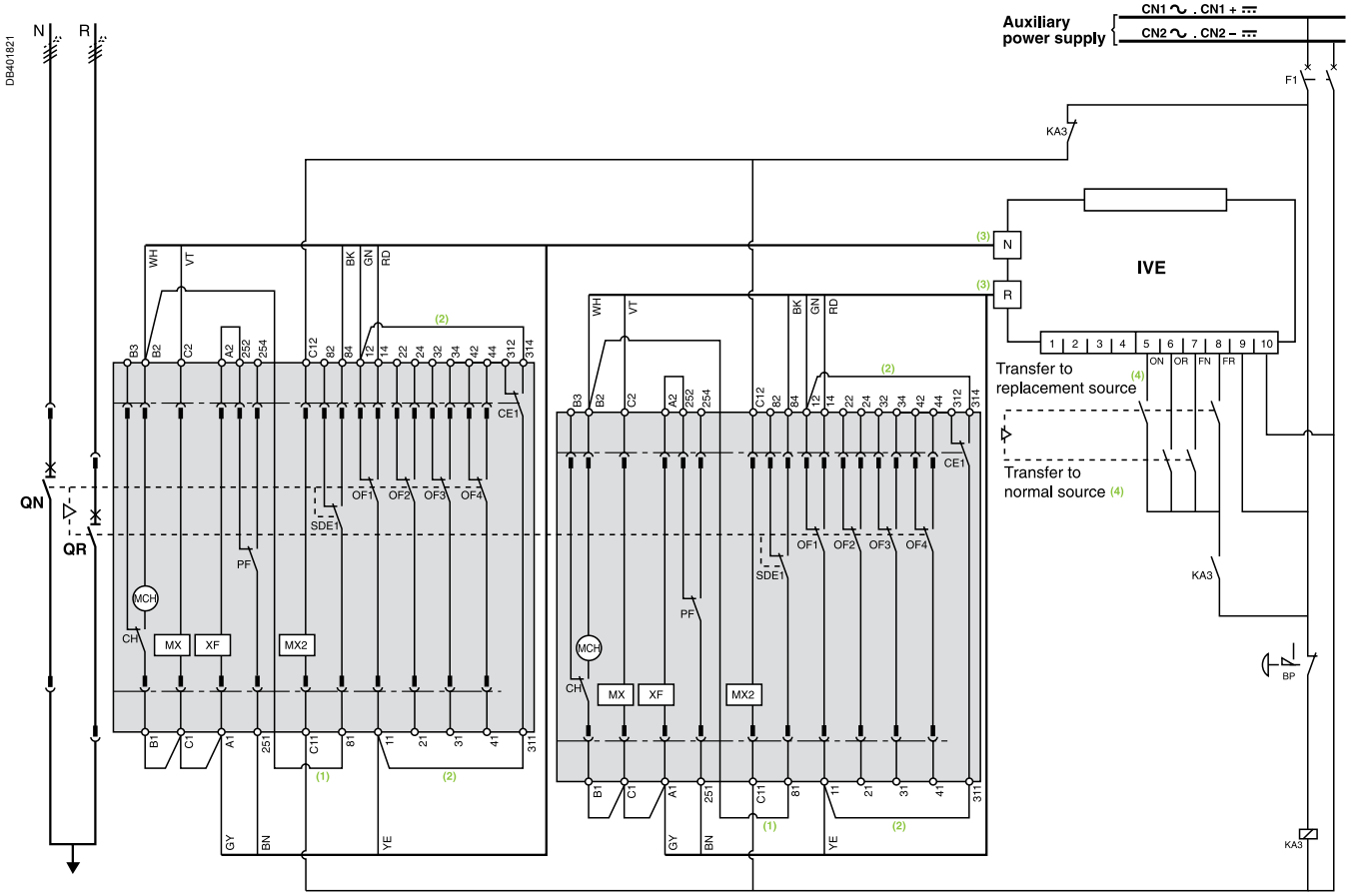

ATTENTION
The diagram shows the electrical wiring for circuit breakers. When wiring the SDE with **switch-disconnectors, connect wire BK to terminal 82.**

(1) Not to be wired for the "without lockout after a fault" solution.
(2) Not to be wired on fixed version.
(3) Prefabricated wiring supplied.
(4) See section "IMPORTANT" here after.

IMPORTANT
The relays controlling the "normal" and "replacement" circuit breakers must be mechanically and/or electrically interlocked to prevent them from giving simultaneous closing commands.

Legends

QN	*"Normal" source Masterpact NT or NW*
QR	*"Replacement" source Masterpact NT or NW*
MCH	*spring-charging motor*
MX	*standard opening voltage release*
XF	*standard closing voltage release*
OF..	*breaker ON/OFF indication contact*
SDE1	*"fault-trip" indication contact*
PF	*"ready-to-close" contact*
CE1	*"connected-position" indication contact (carriage switch)*
CH	*"springs charged" indication contact*
IVE	*electrical interlocking and terminal block unit*
F1	*auxiliary power supply circuit breaker*
BP	*emergency off button with latching*
KA3	*auxiliary relay*
ON	*"Normal" source opening order*
OR	*"Replacement" source opening order*
FN	*"Normal" source closing order (0.25 second delay)*
FR	*"Replacement" source closing order (0.25 second delay)*

Wiring colour codes

RD	GN	BK	VT	YE	GY	WH	BN
red	green	black	violet	yellow	grey	white	brown

States permitted by mechanical interlocking system

Normal	Replacement
0	0
1	0
0	1

Note:
diagram shown with circuit breakers in connected position, open, charged, and ready to close.
Auxiliary power supply = supply voltage of auxiliary relays (KA...) = supply voltage of electrical auxiliaries (electrical operation, MCH, MX, MN...).

2 Masterpact NT or NW devices
Diagram no. 51201144

Electrical interlocking by IVE unit with lockout after a fault and emergency off by undervoltage release

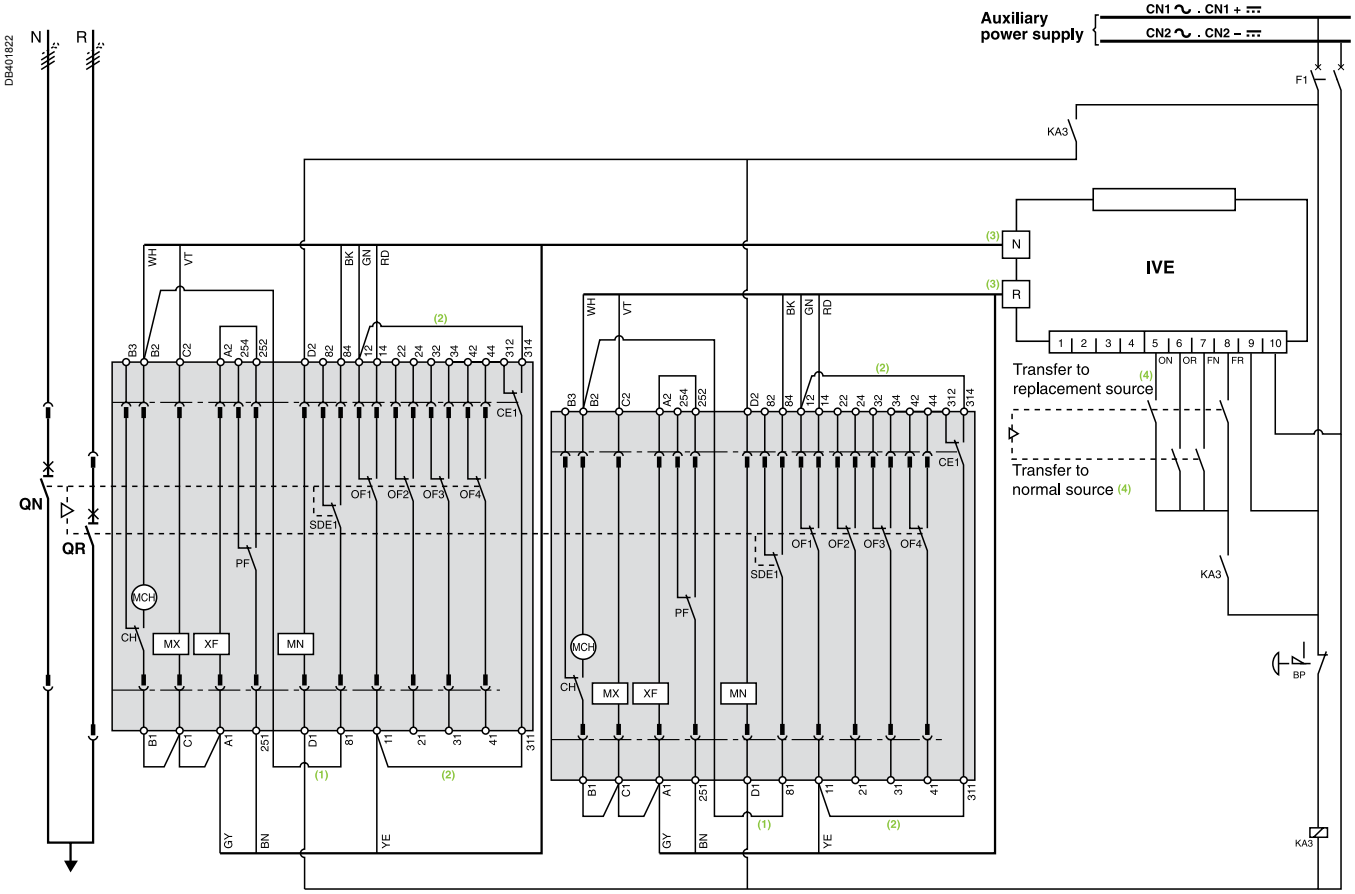

ATTENTION
The diagram shows the electrical wiring for circuit breakers. When wiring the SDE with **switch-disconnectors, connect wire BK to terminal 82.**

(1) Not to be wired for the "without lockout after a fault" solution.
(2) Not to be wired on fixed version.
(3) Prefabricated wiring supplied.
(4) See section "IMPORTANT" here after.

IMPORTANT
The relays controlling the "normal" and "replacement" circuit breakers must be mechanically and/or electrically interlocked to prevent them from giving simultaneous closing commands.

Legends

QN	*"Normal" source Masterpact NT or NW*
QR	*"Replacement" source Masterpact NT or NW*
MCH	*spring-charging motor*
MX	*standard opening voltage release*
XF	*standard closing voltage release*
MN	*undervoltage release*
OF...	*breaker ON/OFF indication contact*
SDE1	*"fault-trip" indication contact*
PF	*"ready-to-close" contact*
CE1	*"connected-position" indication contact (carriage switch)*
CH	*"springs charged" indication contact*
IVE	*electrical interlocking and terminal block unit*
F1	*auxiliary power supply circuit breaker*
BP	*emergency off button with latching*
S1	*control switches*
KA3	*auxiliary relay*
ON	*"Normal" source opening order*
OR	*"Replacement" source opening order*
FN	*"Normal" source closing order (0.25 second delay)*
FR	*"Replacement" source closing order (0.25 second delay)*

Wiring colour codes

RD	GN	BK	VT	YE	GY	WH	BN
red	green	black	violet	yellow	grey	white	brown

States permitted by mechanical interlocking system

Normal	Replacement
0	0
1	0
0	1

Note:
diagram shown with circuit breakers in connected position, open, charged, and ready to close.
Auxiliary power supply = supply voltage of auxiliary relays (KA...) = supply voltage of electrical auxiliaries (electrical operation, MCH, MX, MN...).

Schneider Electric

Remote-operated source-changeover systems

2 Masterpact NT or NW devices

Diagram no. 51156226

Automatic-control system without IVE unit for permanent replacement source with lockout after a fault

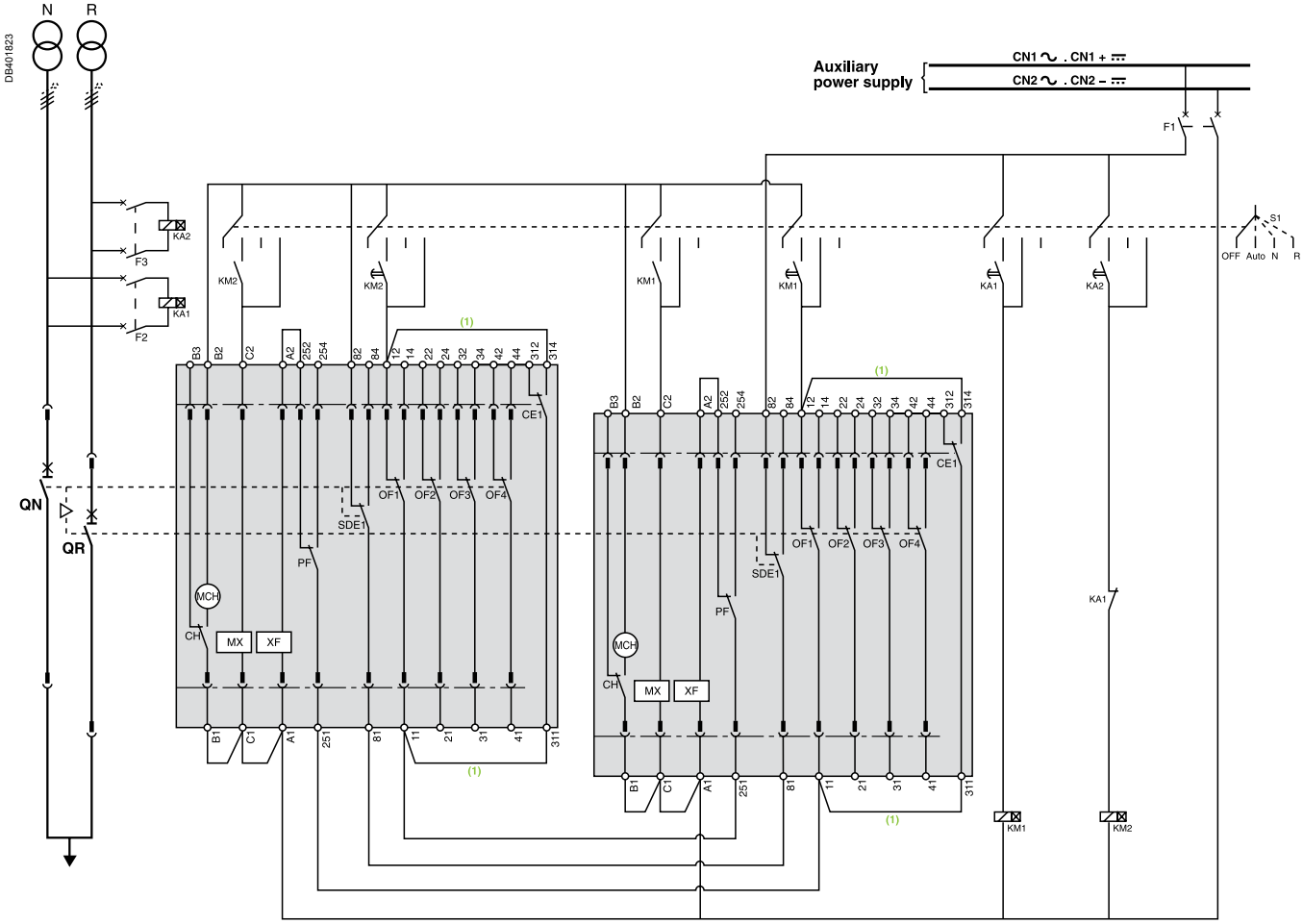

ATTENTION
The diagram shows the electrical wiring for circuit breakers. When wiring the SDE with **switch-disconnectors, connect the SDE to terminals 81 and 84.**

(1) Not to be wired on fixed version.

Legends

QN	*"Normal" source Masterpact NT or NW*
QR	*"Replacement" source Masterpact NT or NW*
MCH	*spring-charging motor*
MX	*standard opening voltage release*
XF	*standard closing voltage release*
OF...	*breaker ON/OFF indication contact*
SDE1	*"fault-trip" indication contact*
PF	*"ready-to-close" contact*
CE1	*"connected-position" indication contact (carriage switch)*
CH	*"springs charged" indication contact*
F1	*auxiliary power supply circuit breaker*
F2/F3	*circuit breaker (high breaking capacity)*
S1	*control switches*
KA1	*auxiliary relays - UN presence detection*
KA2	*auxiliary relays - UR presence detection*
KM1	*contactors with 0.25 second delay (for transfer to "Replacement" source)*
KM2	*contactors with 0.25 second delay (for transfer to "Normal" source)*

States permitted by mechanical interlocking system

Normal	Replacement
0	0
1	0
0	1

Note:
diagram shown with circuit breakers in connected position, open, charged, and ready to close.
Auxiliary power supply = supply voltage of auxiliary relays (KA...) = supply voltage of electrical auxiliaries (electrical operation, MCH, MX, MN...).

2 Masterpact NT or NW devices
Diagram no. 51156227

Automatic-control system for replacement source generator set with lockout after a fault

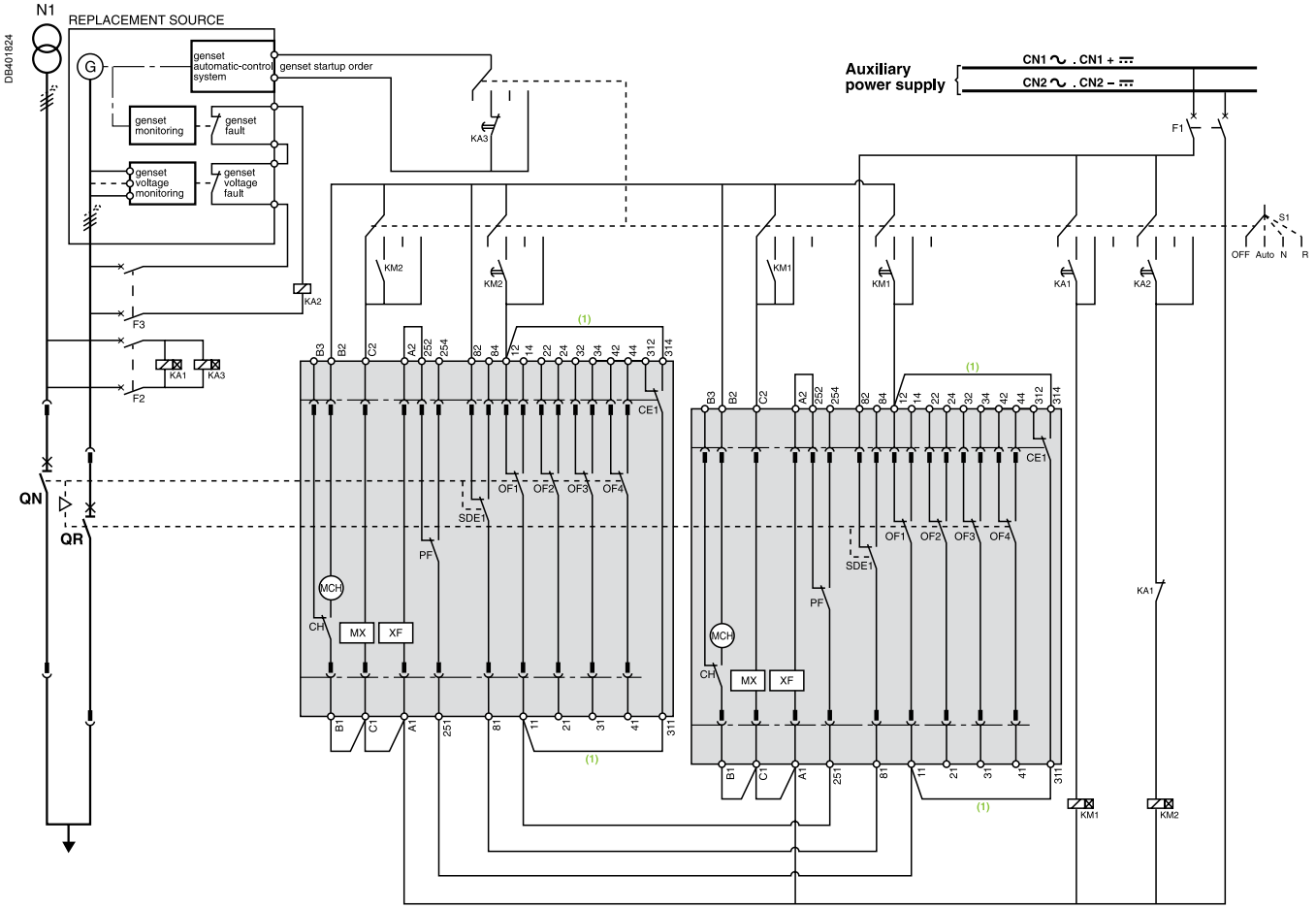

ATTENTION
The diagram shows the electrical wiring for circuit breakers. When wiring the SDE with **switch-disconnectors, connect the SDE to terminals 81 and 84.**

(1) Not to be wired on fixed version.

Legends

QN	*"Normal" source Masterpact NT or NW*
QR	*"Replacement" source Masterpact NT or NW*
MCH	*spring-charging motor*
MX	*standard opening voltage release*
XF	*standard closing voltage release*
OF...	*breaker ON/OFF indication contact*
SDE1	*"fault-trip" indication contact*
PF	*"ready-to-close" contact*
CE1	*"connected-position" indication contact (carriage switch)*
CH	*"springs charged" indication contact*
F1	*auxiliary power supply circuit breaker*
F2/F3	*circuit breaker (high breaking capacity)*
S1	*control switches*
KA1	*auxiliary relays - UN presence detection*
KA2	*auxiliary relays - UR presence detection*
KA3	*auxiliary relays - generator set startup if UN absent*
KM1	*contactors with 0.25 second delay (for transfer to "Replacement" source)*
KM2	*contactors with 0.25 second delay (for transfer to "Normal" source)*

States permitted by mechanical interlocking system

Normal	Replacement
0	0
1	0
0	1

Note:
diagram shown with circuit breakers in connected position, open, charged, and ready to close.
Auxiliary power supply = supply voltage of auxiliary relays (KA...) = supply voltage of electrical auxiliaries (electrical operation, MCH, MX, MN...).

Schneider Electric

Remote-operated source-changeover systems

2 Masterpact NT or NW devices

Diagram no. 51156904

Automatic-control system for permanent replacement source with lockout after a fault (with MN)

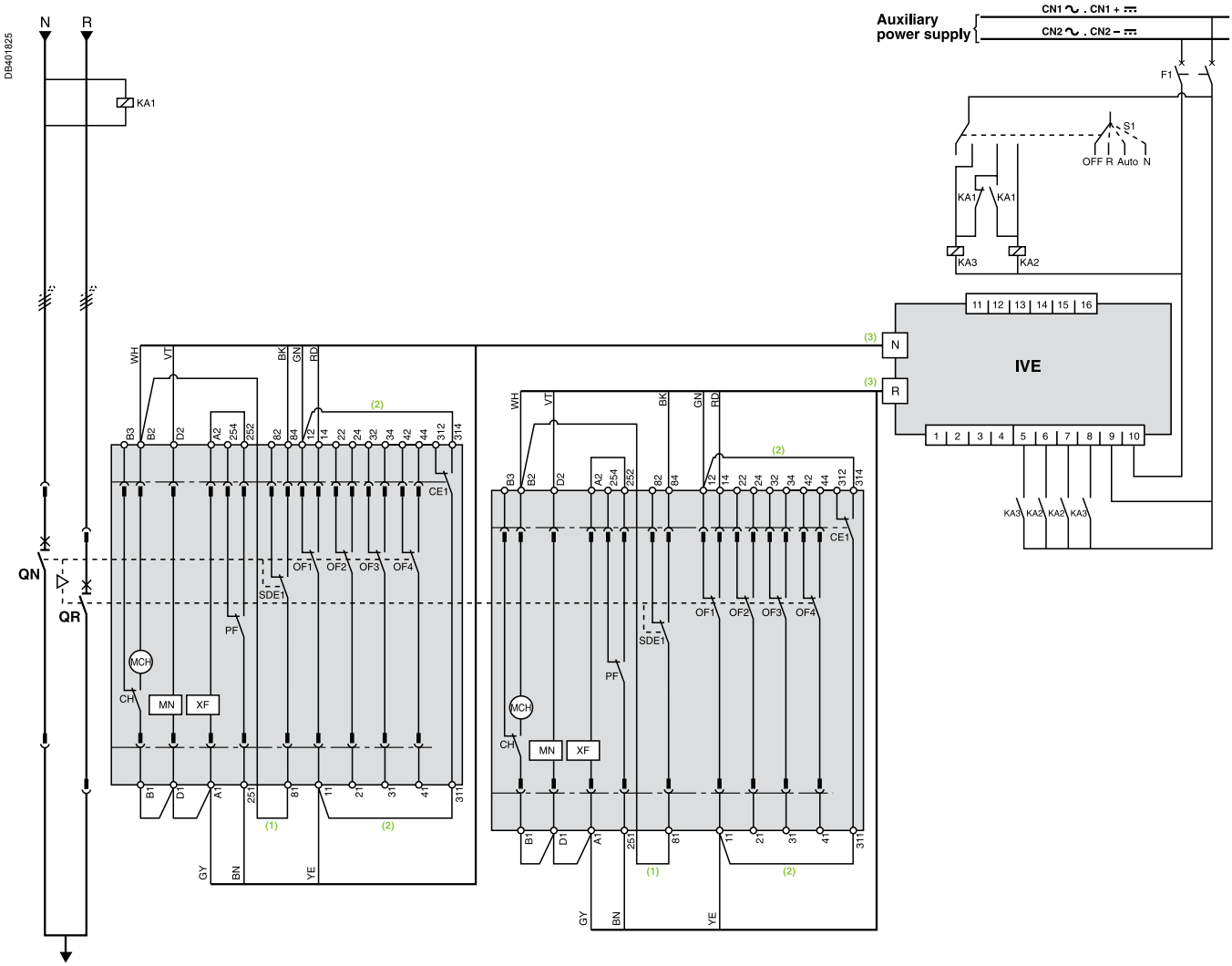

ATTENTION

The diagram shows the electrical wiring for circuit breakers. When wiring the SDE with **switch-disconnectors, connect wire BK to terminal 82.**

(1) Not to be wired for the "without lockout after a fault" solution.
(2) Not to be wired on fixed version.
(3) Prefabricated wiring supplied.

Legends

QN	*"Normal" source Masterpact NT or NW*
QR	*"Replacement" source Masterpact NT or NW*
MCH	*spring-charging motor*
XF	*standard closing voltage release*
MN	*undervoltage release*
OF..	*breaker ON/OFF indication contact*
SDE1	*"fault-trip" indication contact*
PF	*"ready-to-close" contact*
CE1	*"connected-position" indication contact (carriage switch)*
CH	*"springs charged" indication contact*
IVE	*electrical interlocking and terminal block unit*
F1	*auxiliary power supply circuit breaker*
F2	*circuit breaker (high breaking capacity)*
S1	*control switches*
KA1	*auxiliary relays*
KA2	*auxiliary relays*
KA3	*auxiliary relays*

Wiring colour codes

RD	GN	BK	VT	YE	GY	WH	BN
red	green	black	violet	yellow	grey	white	brown

States permitted by mechanical interlocking system

Normal	Replacement
0	0
1	0
0	1

Note:
diagram shown with circuit breakers in connected position, open, charged, and ready to close.
Auxiliary power supply = supply voltage of auxiliary relays (KA...) = supply voltage of electrical auxiliaries (electrical operation, MCH, MX, MN...).

2 Masterpact NT or NW devices
Diagram no. 51156905

Automatic-control system for replacement source generator set with lockout after a fault (with MN)

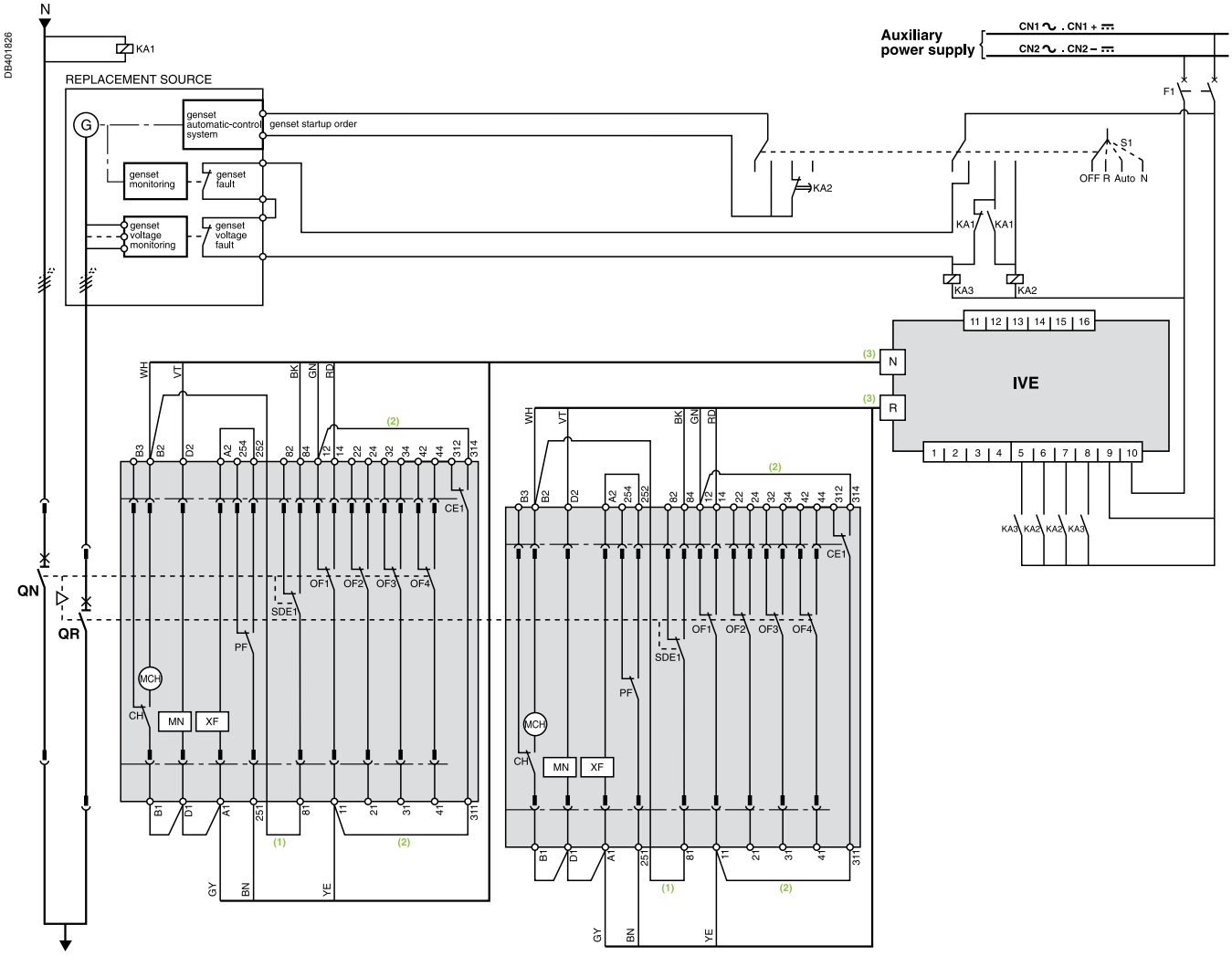

ATTENTION

The diagram shows the electrical wiring for circuit breakers. When wiring the SDE with **switch-disconnectors, connect wire BK to terminal 82.**

(1) Not to be wired for the "without lockout after a fault" solution.
(2) Not to be wired on fixed version.
(3) Prefabricated wiring supplied.

Legends

QN	*"Normal" source Masterpact NT or NW*
QR	*"Replacement" source Masterpact NT or NW*
MCH	*spring-charging motor*
XF	*standard closing voltage release*
MN	*undervoltage release*
OF...	*breaker ON/OFF indication contact*
SDE1	*"fault-trip" indication contact*
PF	*"ready-to-close" contact*
CE1	*"connected-position" indication contact (carriage switch)*
CH	*"springs charged" indication contact*
IVE	*electrical interlocking and terminal block unit*
F1	*auxiliary power supply circuit breaker*
F2	*circuit breaker (high breaking capacity)*
S1	*control switches*
KA1	*auxiliary relay*
KA2	*time delay for genset startup order to avoid starting the genset for transient UN disturbances*
KA3	*auxiliary relay*

Wiring colour codes

RD	GN	BK	VT	YE	GY	WH	BN
red	green	black	violet	yellow	grey	white	brown

States permitted by mechanical interlocking system

Normal	Replacement
0	0
1	0
0	1

Note:
diagram shown with circuit breakers in connected position, open, charged, and ready to close.
Auxiliary power supply = supply voltage of auxiliary relays (KA...) = supply voltage of electrical auxiliaries (electrical operation, MCH, MX, MN...).

Schneider Electric

Remote-operated source-changeover systems

3 Masterpact NW devices

Diagram no. 51156906

2 normal sources and 1 replacement source: electrical interlocking without lockout after a fault

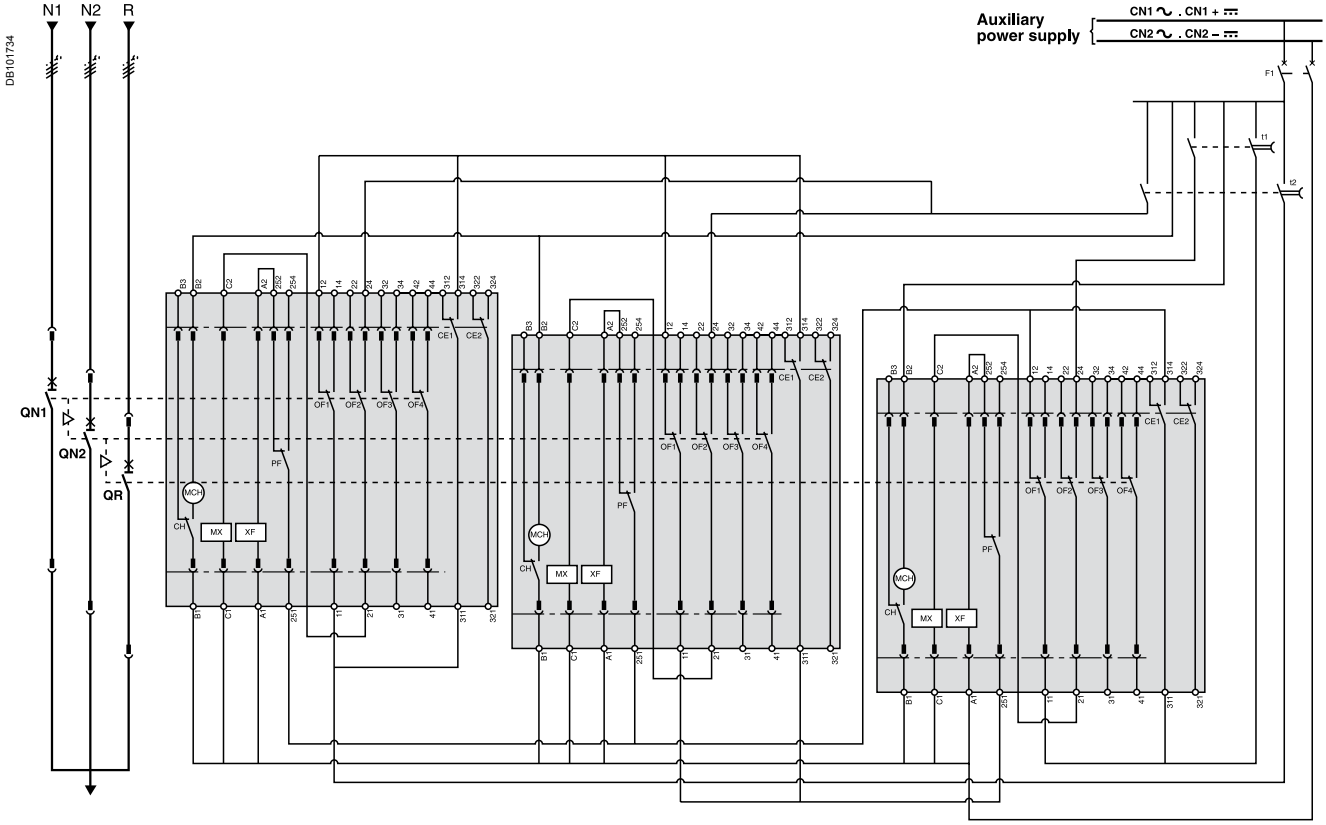

Legends

QN...	*"Normal" source Masterpact NW*
QR	*"Replacement" source Masterpact NW*
MCH	*spring-charging motor*
MX	*standard opening voltage release*
XF	*standard closing voltage release*
OF..	*breaker ON/OFF indication contact*
PF	*"ready-to-close" contact*
CE	*"connected-position" indication contact (carriage switch)*
CH	*"springs charged" indication contact*
F1	*auxiliary power supply circuit breaker*
t1	*order for transfer from "R" to "N1 + N2" (QN1 and QN2 closing time delay = 0.25 sec. minimum)*
t2	*order for transfer from "N1 + N2" to "R" (QR closing time delay = 0.25 sec. minimum)*

States permitted by mechanical interlocking system

Normal 1	Normal 2	Replacement
0	0	0
1	1	0
0	0	1
1	0	0
0	1	0

Note:
diagram shown with circuit breakers in connected position, open, charged, and ready to close.
Auxiliary power supply = supply voltage of auxiliary relays (KA...) = supply voltage of electrical auxiliaries (electrical operation, MCH, MX, MN...).

3 Masterpact NW devices
Diagram no. 51156907

2 normal sources and 1 replacement source: electrical interlocking with lockout after a fault

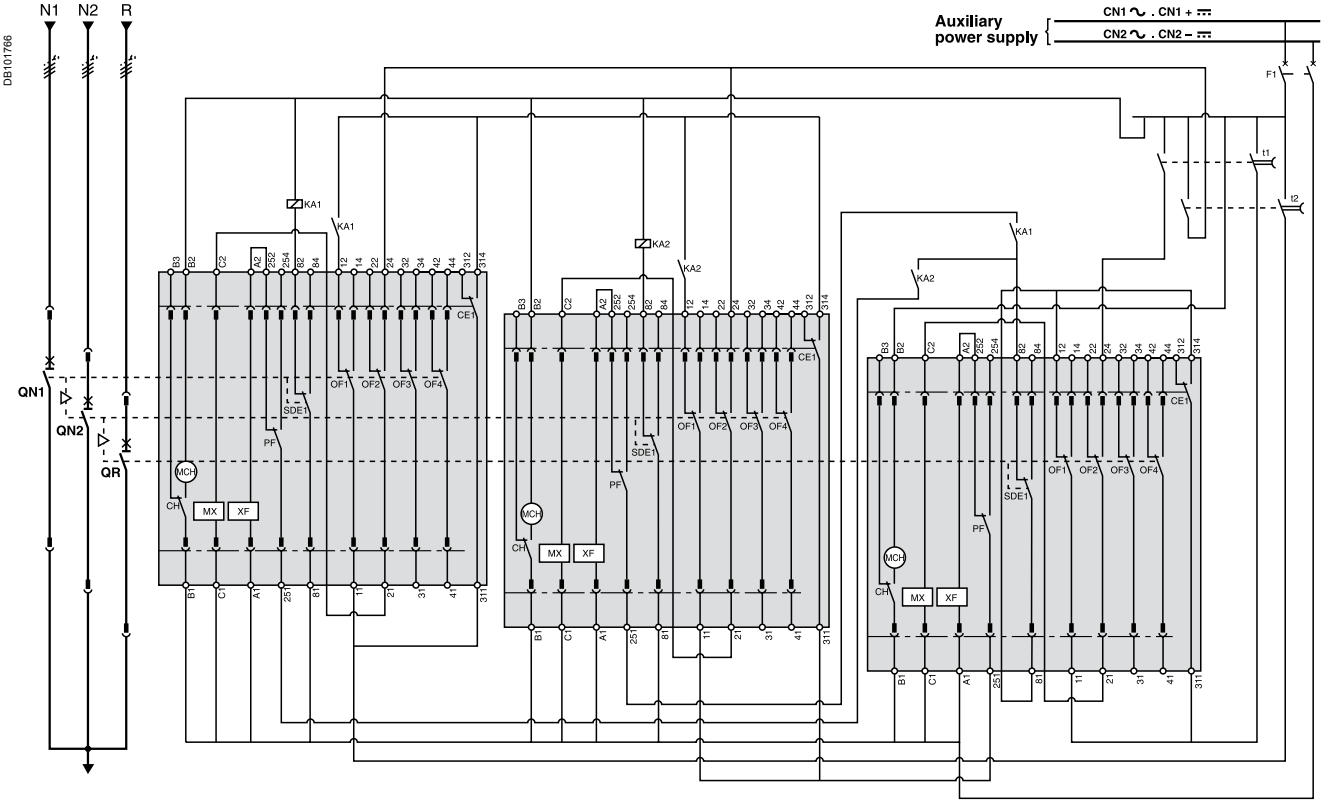

ATTENTION
The diagram shows the electrical wiring for circuit breakers. When wiring the SDE with **switch-disconnectors, connect the SDE to terminals 81 and 84.**

Legends

QN...	*"Normal" source Masterpact NW*
QR	*"Replacement" source Masterpact NW*
MCH	*spring-charging motor*
MX	*standard opening voltage release*
XF	*standard closing voltage release*
OF...	*breaker ON/OFF indication contact*
SDE1	*"fault-trip" indication contact*
PF	*"ready-to-close" contact*
CE1	*"connected-position" indication contact (carriage switch)*
CH	*"springs charged" indication contact*
F1	*auxiliary power supply circuit breaker*
S1	*control switches*
S2	*source selection switches*
t1	*order for transfer from "R" to "N1 + N2" (QN1 and QN2 closing time delay = 0.25 sec. minimum)*
t2	*order for transfer from "N1 + N2" to "R" (QR closing time delay = 0.25 sec. minimumm)*

States permitted by mechanical interlocking system

Normal 1	Normal 2	Replacement
0	0	0
1	1	0
0	0	1
1	0	0
0	1	0

Note:
diagram shown with circuit breakers in connected position, open, charged, and ready to close.
Auxiliary power supply = supply voltage of auxiliary relays (KA...) = supply voltage of electrical auxiliaries (electrical operation, MCH, MX, MN...).

Schneider Electric

Remote-operated source-changeover systems

3 Masterpact NW devices

Diagram no. 51156908

2 normal sources and 1 replacement source: automatic-control system for generator set without lockout after a fault (with MN)

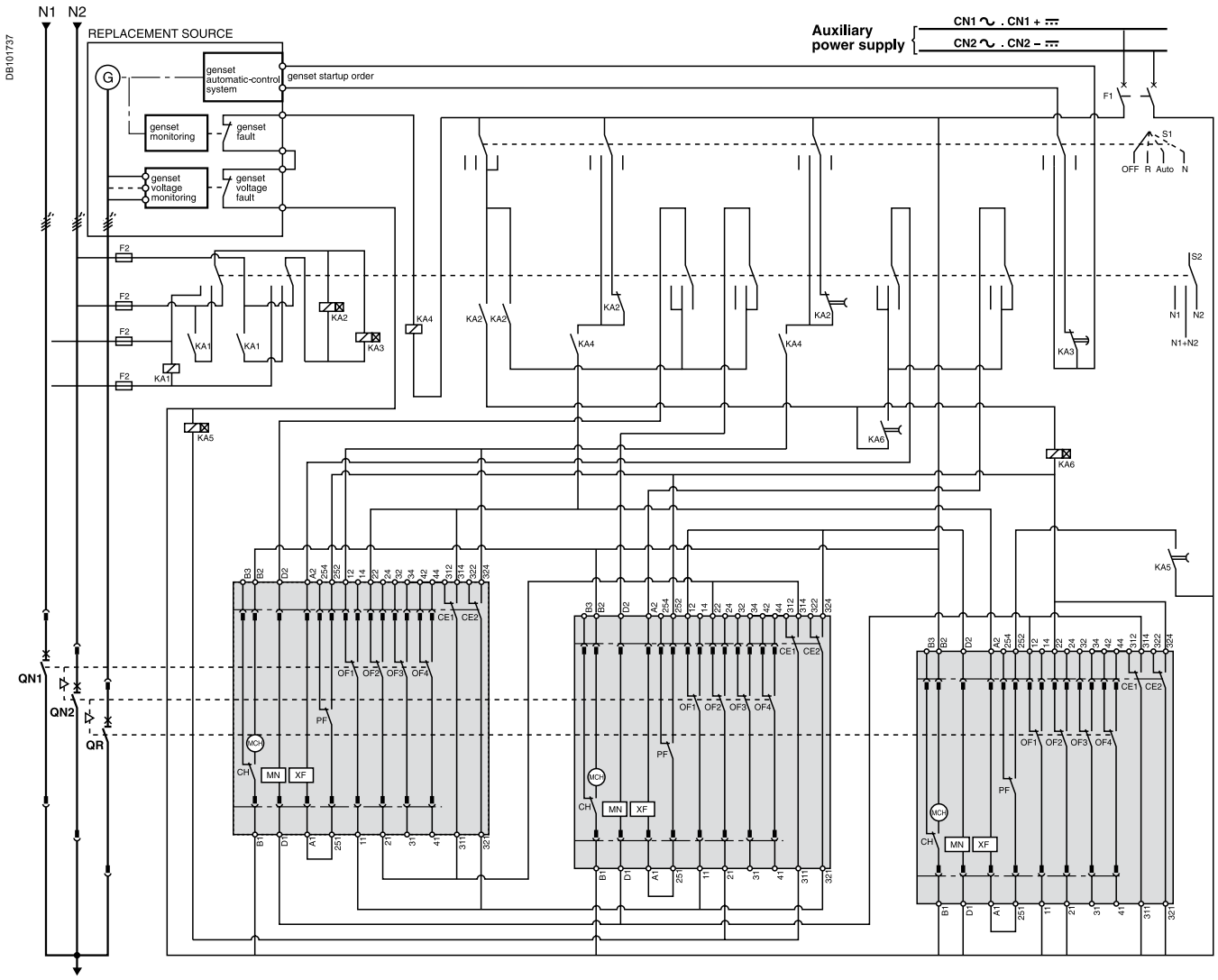

Legends

QN...	*"Normal" source Masterpact NW*
QR	*"Replacement" source Masterpact NW*
MCH	*spring-charging motor*
XF	*standard closing voltage release*
MN	*undervoltage release*
OF...	*breaker ON/OFF indication contact*
PF	*"ready-to-close" contact*
CE...	*"connected-position" indication contact (carriage switch)*
CH	*"springs charged" indication contact*
F1	*auxiliary power supply circuit breaker*
F2/F3	*circuit breaker (high breaking capacity)*
S1	*control switches*
S2	*source selection switches*
KA1	*auxiliary relay*
KA2	*auxiliary relays with 10 to 180 sec. time delay*
KA3	*auxiliary relays with 0.1 to 30 sec. time delay*
KA4	*auxiliary relay*
KA5	*auxiliary relays with 0.25 sec. time delay*
KA6	*auxiliary relays with 0.25 sec. time delay*

States permitted by mechanical interlocking system and with associated automatism

Normal 1	Normal 2	Replacement
0	0	0
1	1	0
0	0	1
1	0	0
0	1	0

Note:
diagram shown with circuit breakers in connected position, open, charged, and ready to close.
Auxiliary power supply = supply voltage of auxiliary relays (KA...) = supply voltage of electrical auxiliaries (electrical operation, MCH, MX, MN...).

3 Masterpact NW devices
Diagram no. 51156909

2 normal sources and 1 replacement source: automatic-control system for generator set with lockout after a fault (with MN)

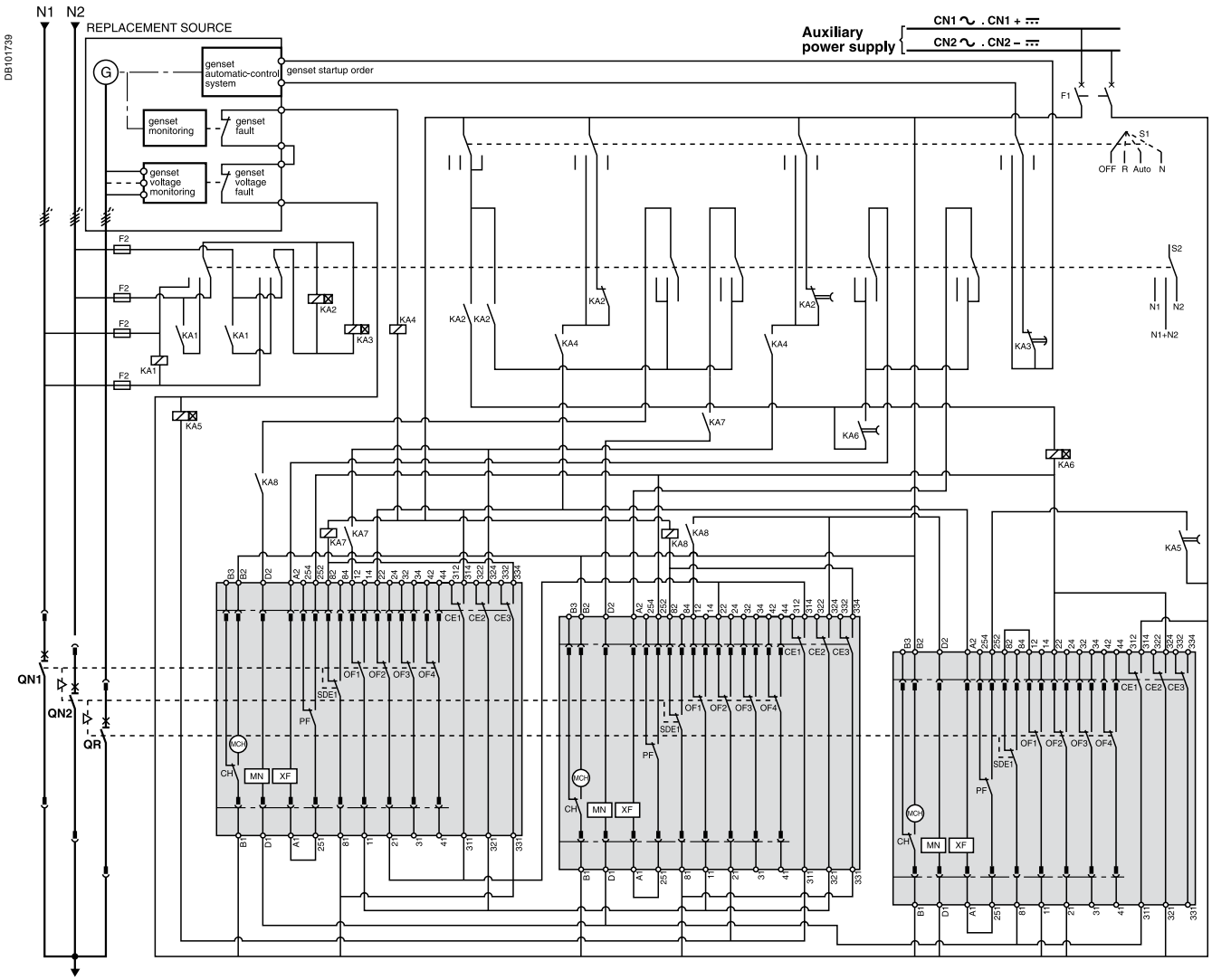

ATTENTION

The diagram shows the electrical wiring for circuit breakers. When wiring the SDE with **switch-disconnectors, connect the SDE to terminals 81 and 84.**

Legends

QN...	*"Normal" source Masterpact NW*
QR	*"Replacement" source Masterpact NW*
MCH	*spring-charging motor*
XF	*standard closing voltage release*
MN	*undervoltage release*
OF...	*breaker ON/OFF indication contact*
SDE1	*"fault-trip" indication contact*
PF	*"ready-to-close" contact*
CE...	*"connected-position" indication contact (carriage switch)*
CH	*"springs charged" indication contact*
F1	*auxiliary power supply circuit breaker*
F2/F3	*circuit breaker (high breaking capacity)*
S1	*control switches*
S2	*source selection switches*
KA1	*auxiliary relay*
KA2	*auxiliary relays with 10 to 180 sec. time delay*
KA3	*auxiliary relays with 0.1 to 30 sec. time delay*
KA4	*auxiliary relay*
KA5	*auxiliary relays with 0.25 sec. time delay*
KA6	*auxiliary relays with 0.25 sec. time delay*
KA7	*auxiliary relay*
KA8	*auxiliary relay*

States permitted by mechanical interlocking system and with associated automatism

Normal 1	Normal 2	Replacement
0	0	0
1	1	0
0	0	1
1	0	0
0	1	0

Note:
diagram shown with circuit breakers in connected position, open, charged, and ready to close.
Auxiliary power supply = supply voltage of auxiliary relays (KA...)
= supply voltage of electrical auxiliaries (electrical operation, MCH, MX, MN...).

Schneider Electric

Remote-operated source-changeover systems

3 Masterpact NW devices

Diagram no. 51156910

3 sources with only 1 device closed: electrical interlocking without lockout after a fault

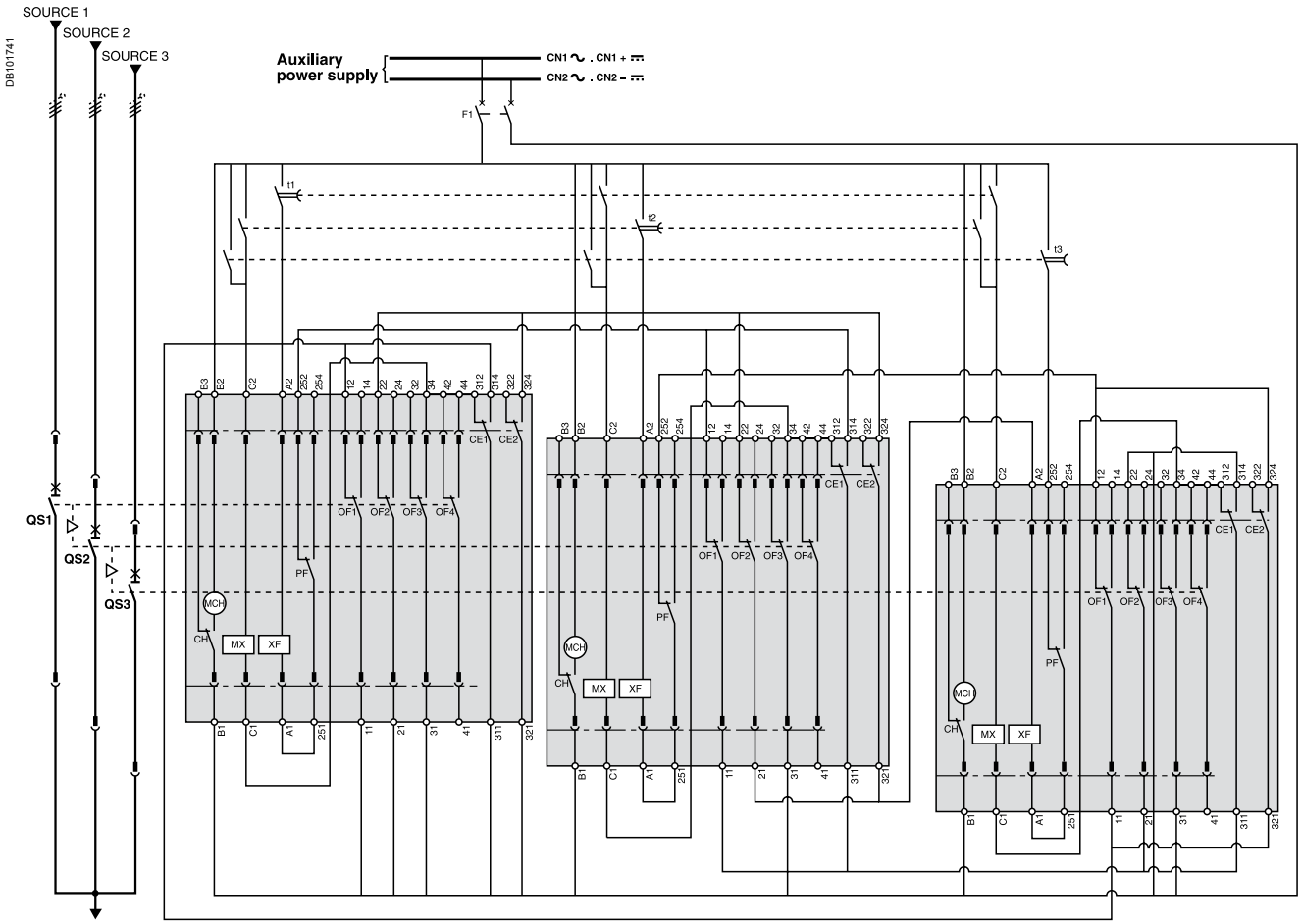

Legends

QS...	*"Source" Masterpact NW*
MCH	*spring-charging motor*
MX	*standard opening voltage release*
XF	*standard closing voltage release*
OF..	*breaker ON/OFF indication contact*
PF	*"ready-to-close" contact*
CE...	*"connected-position" indication contact (carriage switch)*
CH	*"springs charged" indication contact*
F1	*auxiliary power supply circuit breaker*
t1	*order for transfer to "Source 1" (QS1 closing time delay = 0.25 sec. minimum)*
t2	*order for transfer to "Source 2" (QS2 closing time delay = 0.25 sec. minimum)*
t3	*order for transfer to "Source 3" (QS3 closing time delay = 0.25 sec. minimum)*

States permitted by mechanical interlocking system

Source 1	Source 2	Source 3
0	0	0
1	0	0
0	1	0
0	0	1

Note:
diagram shown with circuit breakers in connected position, open, charged, and ready to close.
Auxiliary power supply = supply voltage of auxiliary relays (KA...) = supply voltage of electrical auxiliaries (electrical operation, MCH, MX, MN...).

3 Masterpact NW devices
Diagram no. 51156911

3 sources with only 1 device closed: electrical interlocking with lockout after a fault

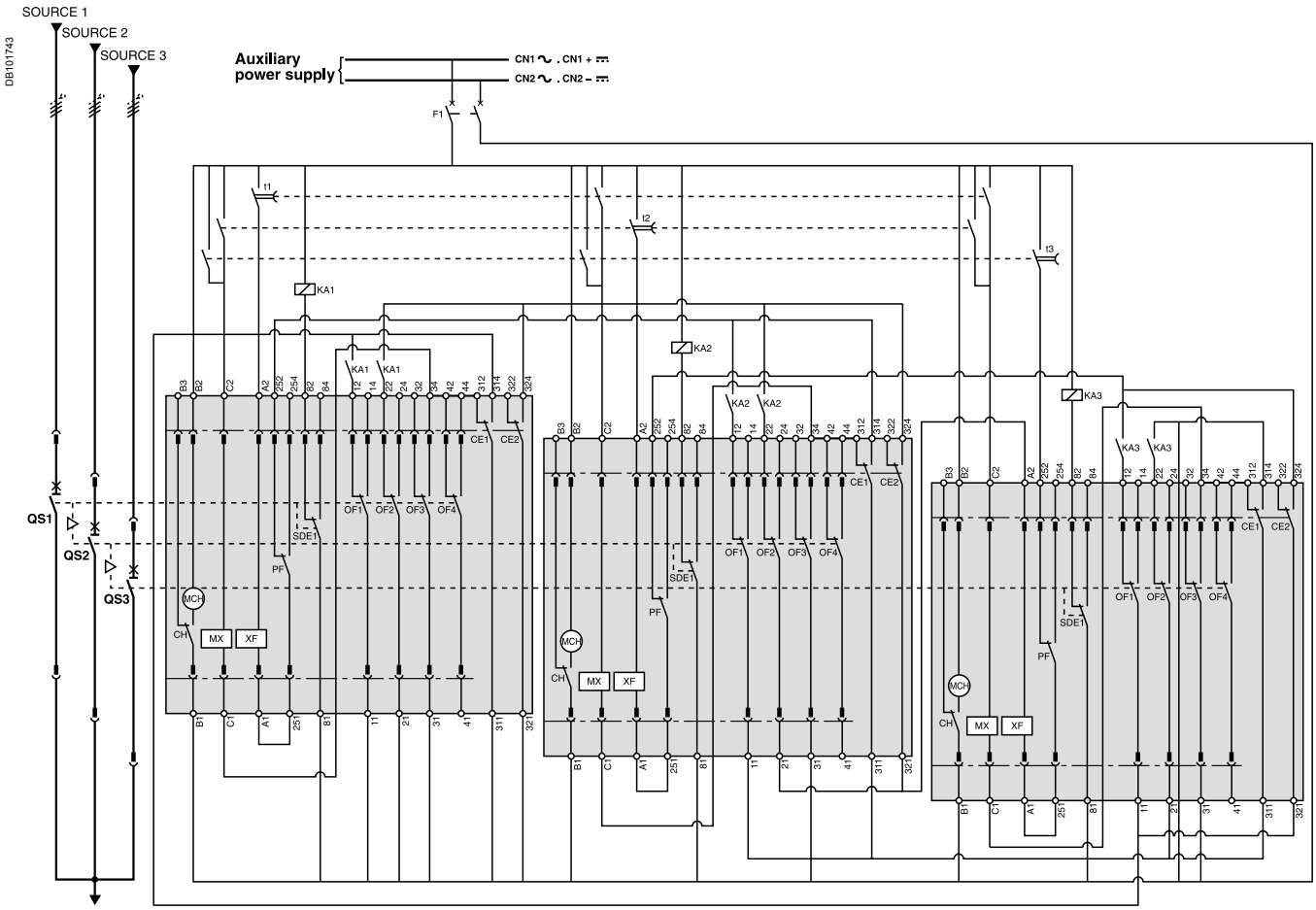

ATTENTION

The diagram shows the electrical wiring for circuit breakers. When wiring the SDE with **switch-disconnectors, connect the SDE to terminals 81 and 84.**

Legends

QS...	*"Source" Masterpact NW*
MCH	*spring-charging motor*
MX	*standard opening voltage release*
XF	*standard closing voltage release*
OF...	*breaker ON/OFF indication contact*
SDE1	*"fault-trip" indication contact*
PF	*"ready-to-close" contact*
CE...	*"connected-position" indication contact (carriage switch)*
CH	*"springs charged" indication contact*
F1	*auxiliary power supply circuit breaker*
t1	*order for transfer to "Source 1" (QS1 closing time delay = 0.25 sec. minimum)*
t2	*order for transfer to "Source 2" (QS2 closing time delay = 0.25 sec. minimum)*
t3	*order for transfer to "Source 3" (QS3 closing time delay = 0.25 sec. minimum)*
KA1	*auxiliary relays*
KA2	*auxiliary relays*
KA3	*auxiliary relays*

States permitted by mechanical interlocking system

Source 1	Source 2	Source 3
0	0	0
1	0	0
0	1	0
0	0	1

Note:
diagram shown with circuit breakers in connected position, open, charged, and ready to close.
Auxiliary power supply = supply voltage of auxiliary relays (KA...) = supply voltage of electrical auxiliaries (electrical operation, MCH, MX, MN...).

Schneider Electric

Remote-operated source-changeover systems

3 Masterpact NW devices

Diagram no. 51156912

2 sources and 1 coupling: electrical interlocking without lockout after a fault

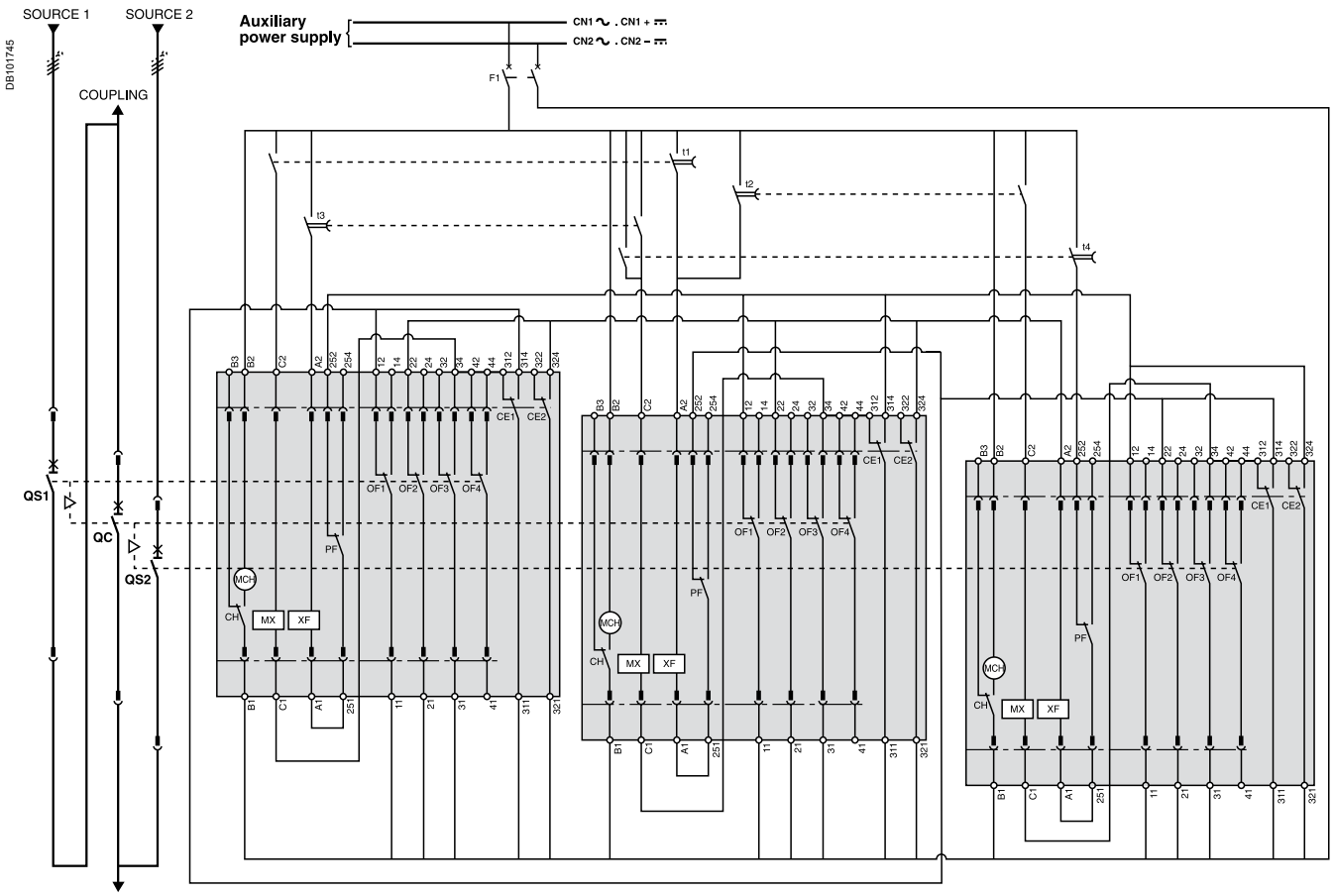

Legends

QS...	*"Source" Masterpact NW*
QC	*"Coupling" Masterpact NW*
MCH	*spring-charging motor*
MX	*standard opening voltage release*
XF	*standard closing voltage release*
OF...	*breaker ON/OFF indication contact*
PF	*"ready-to-close" contact*
CE...	*"connected-position" indication contact (carriage switch)*
CH	*"springs charged" indication contact*
F1	*auxiliary power supply circuit breaker*
t1	*coupling order for "Source 1 failure" (QC closing time delay = 0.25 sec. minimum)*
t2	*coupling order for "Source 2 failure" (QC closing time delay = 0.25 sec. minimum)*
t3	*coupling order for "Source 1 restored" (QS1 closing time delay = 0.25 sec. minimum)*
t4	*coupling order for "Source 2 restored " (QS2 closing time delay = 0.25 sec. minimum)*

States permitted by mechanical interlocking system

Source 1	Source 2	Coupling
0	0	0
1	1	0
1	0	1
0	1	1
1	0	0
0	1	0
0	0	1

Note:
diagram shown with circuit breakers in connected position, open, charged, and ready to close.
Auxiliary power supply = supply voltage of auxiliary relays (KA...) = supply voltage of electrical auxiliaries (electrical operation, MCH, MX, MN...).

3 Masterpact NW devices
Diagram no. 51156913

2 sources and 1 coupling: electrical interlocking with lockout after a fault

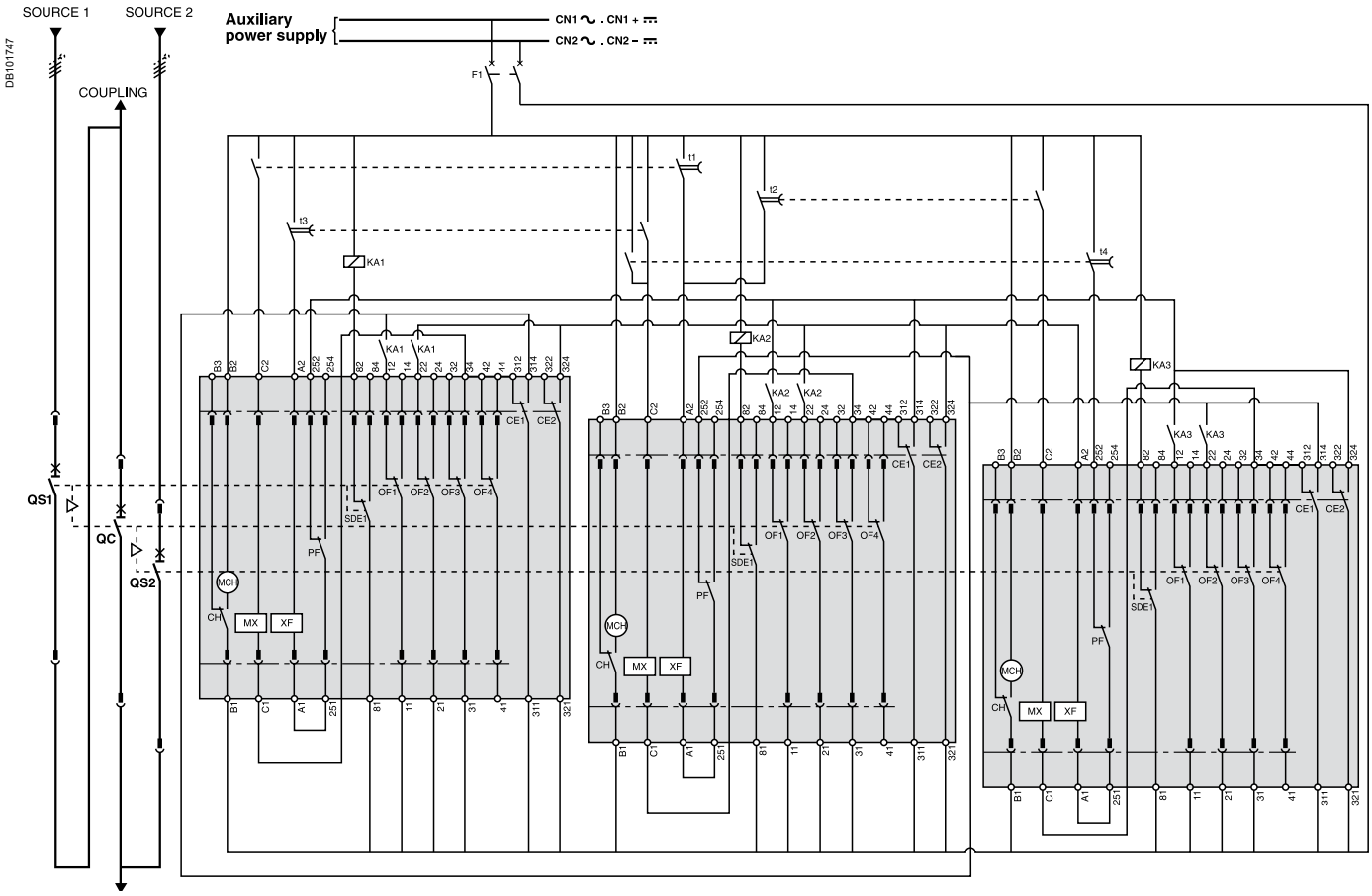

ATTENTION
The diagram shows the electrical wiring for circuit breakers. When wiring the SDE with **switch-disconnectors, connect the SDE to terminals 81 and 84.**

Legends

QS...	*"Source" Masterpact NW*
QC	*"Coupling" Masterpact NW*
MCH	*spring-charging motor*
MX	*standard opening voltage release*
XF	*standard closing voltage release*
OF...	*breaker ON/OFF indication contact*
SDE1	*"fault-trip" indication contact*
PF	*"ready-to-close" contact*
CE...	*"connected-position" indication contact (carriage switch)*
CH	*"springs charged" indication contact*
F1	*auxiliary power supply circuit breaker*
t1	*coupling order for "Source 1 failure" (QC closing time delay = 0.25 sec. minimum)*
t2	*coupling order for "Source 2 failure" (QC closing time delay = 0.25 sec. minimum)*
t3	*coupling order for "Source 1 restored" (QS1 closing time delay = 0.25 sec. minimum)*
t4	*coupling order for "Source 2 restored " (QS2 closing time delay = 0.25 sec. minimum)*
KA1	*auxiliary relays*
KA2	*auxiliary relays*
KA3	*auxiliary relays*

States permitted by mechanical interlocking system

Source 1	Source 2	Coupling
0	0	0
1	1	0
1	0	1
0	1	1
1	0	0
0	1	0
0	0	1

Note:
diagram shown with circuit breakers in connected position, open, charged, and ready to close.
Auxiliary power supply = supply voltage of auxiliary relays (KA...) = supply voltage of electrical auxiliaries (electrical operation, MCH, MX, MN...).

Schneider Electric

Remote-operated source-changeover systems

3 Masterpact NW devices

Diagram no. 51156914

2 sources and 1 coupling: automatic-control system with lockout after a fault

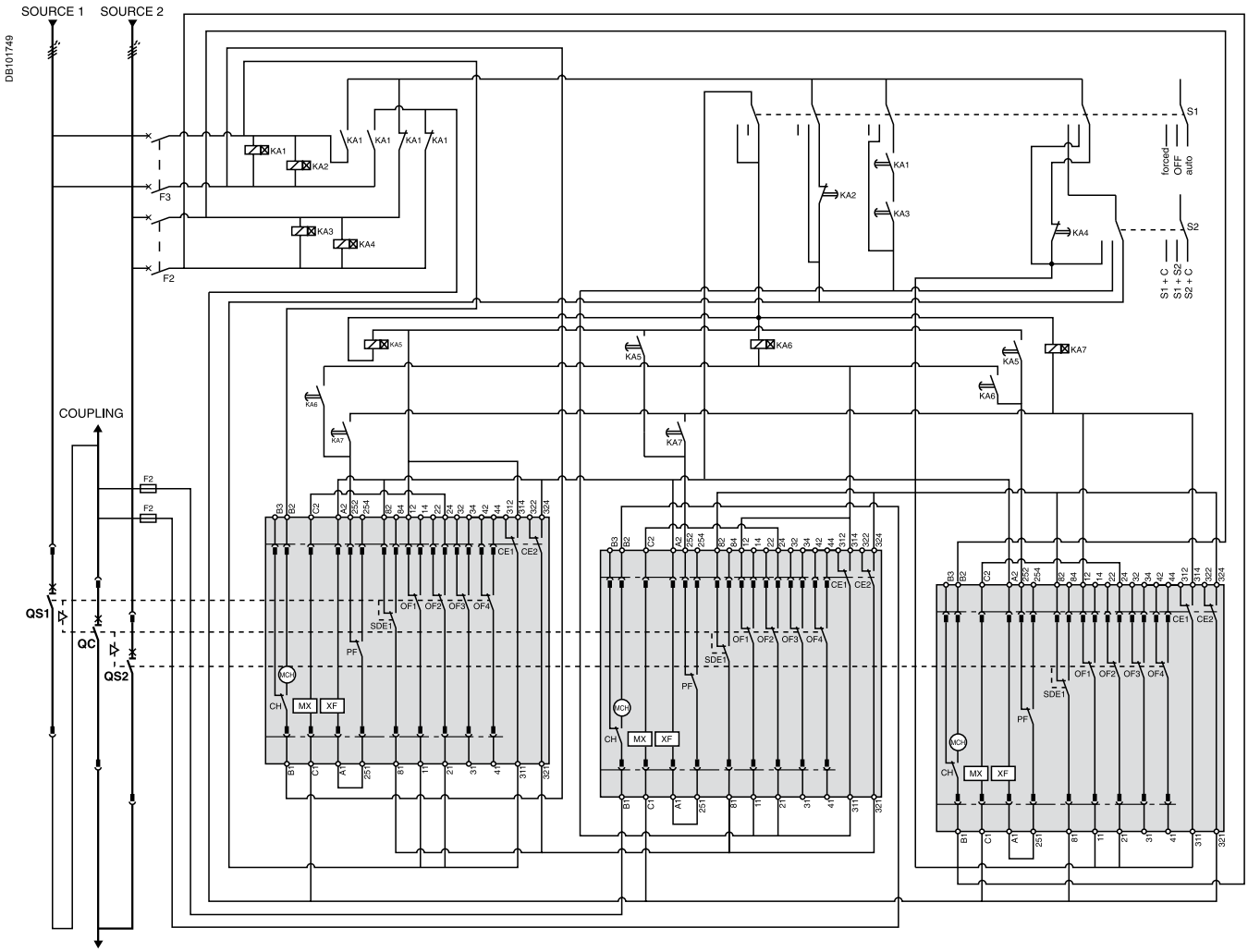

ATTENTION

The diagram shows the electrical wiring for circuit breakers. When wiring the SDE with **switch-disconnectors, connect the SDE to terminals 81 and 84.**

Legends

QS...	*"Source" Masterpact NW*
QC	*"Coupling" Masterpact NW*
MCH	*spring-charging motor*
MX	*standard opening voltage release*
XF	*standard closing voltage release*
OF..	*breaker ON/OFF indication contact*
SDE1	*"fault trip" indication contact*
PF	*"ready-to-close" contact*
CE...	*"connected-position" indication contact (carriage switch)*
CH	*"springs charged" indication contact*
F1	*auxiliary power supply circuit breaker*
F2/F3	*circuit breaker (high breaking capacity)*
S1	*control switches*
S2	*source selection switches*
KA1	*auxiliary relays with 10 to 180 sec. time delay*
KA2	*auxiliary relays with 0.1 to 30 sec. time delay*
KA3	*auxiliary relays with 10 to 180 sec. time delay*
KA4	*auxiliary relays with 0.1 to 30 sec. time delay*
KA5	*auxiliary relays with 0.25 sec. time delay*
KA6	*auxiliary relays with 0.25 sec. time delay*
KA7	*auxiliary relays with 0.25 sec. time delay*

States permitted by mechanical interlocking system and with associated automatism

Source 1	Source 2	Coupling
0	0	0
1	1	0
1	0	1
0	1	1
1	0	0
0	1	0
0	0	1

Note:
diagram shown with circuit breakers in connected position, open, charged, and ready to close.
Auxiliary power supply = supply voltage of auxiliary relays (KA...)
= supply voltage of electrical auxiliaries (electrical operation, MCH, MX, MN...).

Source-changeover systems with automatic controllers

2 Compact NSX100/630, NS630b/1600 or Masterpact NT/NW devices

Source-changeover system with BA controller

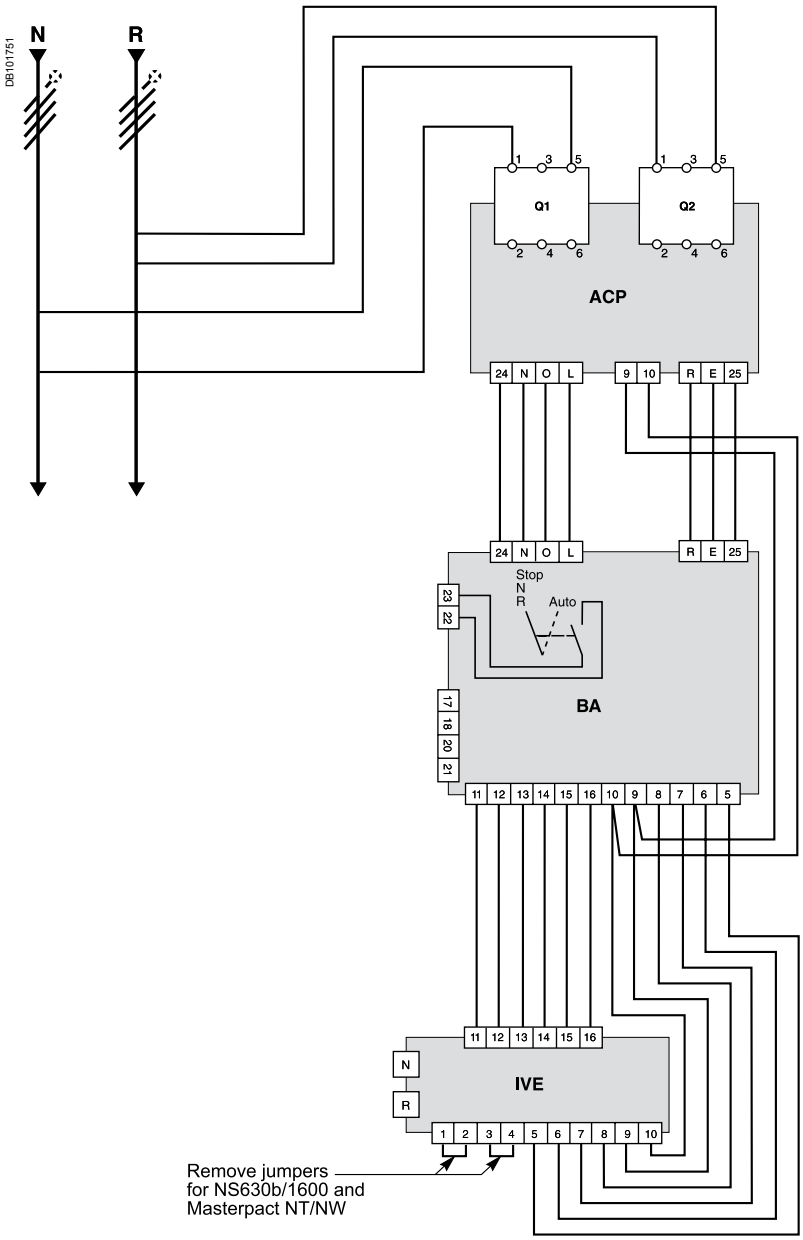

Coupling

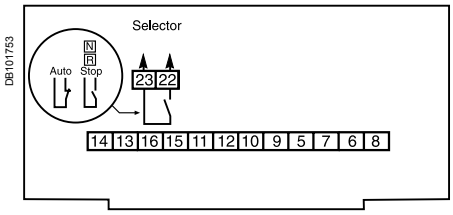

Transfer conditions

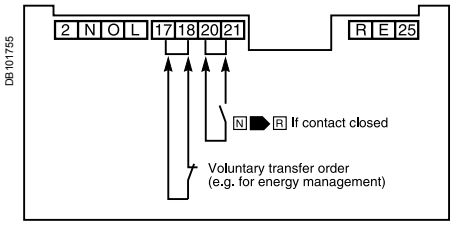

Terminals 20 and 21:
additional control contact (not part of controller).

Tests on "Normal" and "Replacement" source voltages
The single-phase check for UN and UR is implemented across terminals 1 and 5 of circuit breakers Q1 and Q2.

Legends

Q1	*circuit breaker supplying and protecting the automatic-control circuits for the "Normal" source*
Q2	*circuit breaker supplying and protecting the automatic-control circuits for the "Replacement" source*
ACP	*control plate*
BA	*automatic controller*
IVE	*electrical interlocking and terminal block unit*

Note:
diagram shown with circuits de-energised, circuit breakers open and relays in normal position.

Source-changeover systems with automatic controllers

2 Compact NSX100/630, NS630b/1600 or Masterpact NT/NW devices

Source-changeover system with UA controller

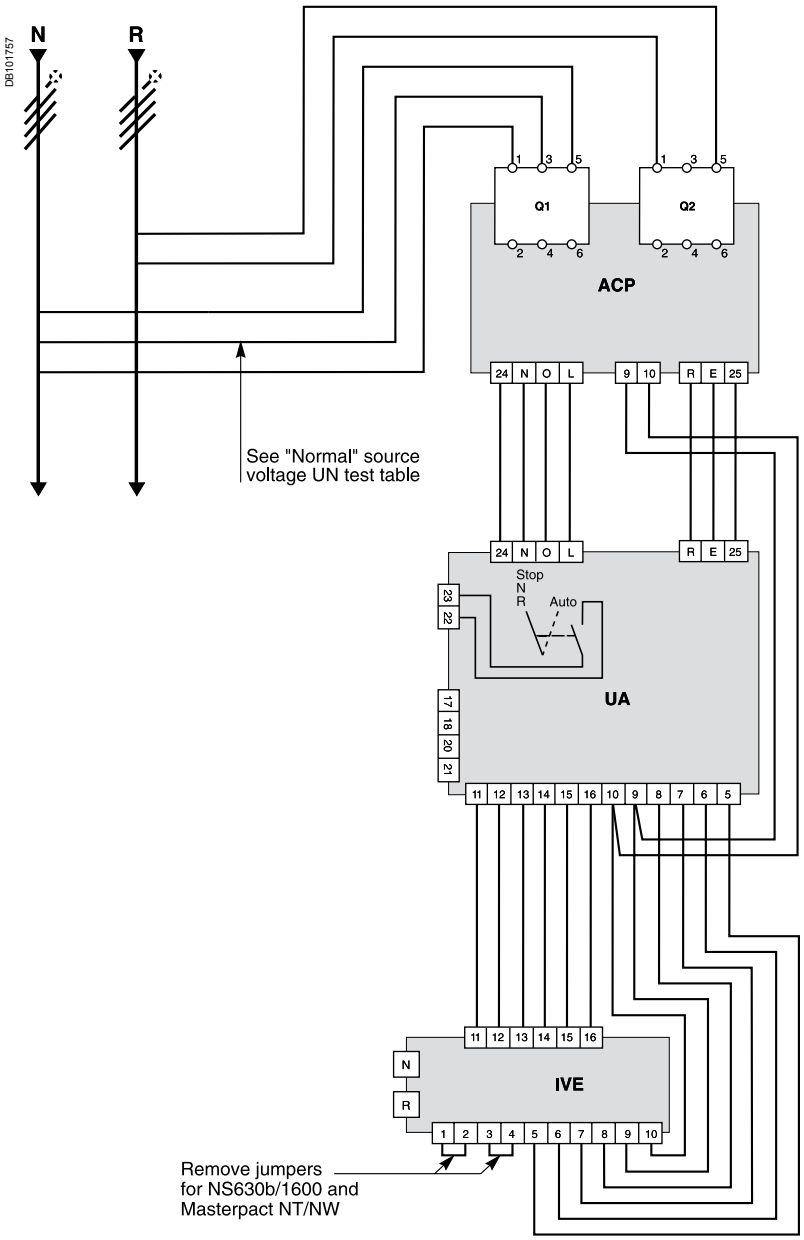

Load shedding and genset management

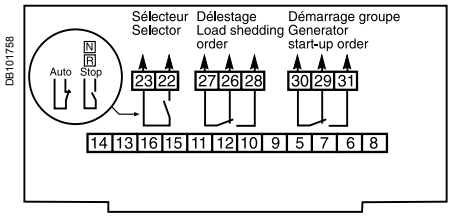

Transfer conditions

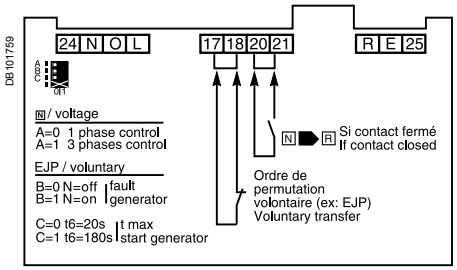

Terminals 20 and 21:
additional control contact (not part of controller).

Tests on "Normal" and "Replacement" source voltages

"Normal" source voltage UN test

DB101761

Ref. UA UA150	29472 29474	29472 29474	29473 29475
Supply voltage / Switch position	N / φ 220/240VAC 50/60Hz	φ / φ 220/240VAC 50/60Hz	φ / φ 380/415VAC 50/60Hz 440V - 60Hz
A = 0	N φ 1L1 3L2 5L3 Q1	φ φ 1L1 3L2 5L3 Q1	φ φ 1L1 3L2 5L3 Q1
A = 1		φ φ φ 1L1 3L2 5L3 Q1	φ φ φ 1L1 3L2 5L3 Q1

"Replacement" source voltage UR test
The single-phase check for UR is implemented across terminals 1 and 5 of circuit breaker Q2.

Legends

Q1 *circuit breaker supplying and protecting the automatic-control circuits for the "Normal" source*
Q2 *circuit breaker supplying and protecting the automatic-control circuits for the "Replacement" source*
ACP *control plate*
UA *automatic controller*
IVE *electrical interlocking and terminal block unit*

Note:
diagram shown with circuits de-energised, circuit breakers open and relays in normal position.

Controller settings

Controller settings

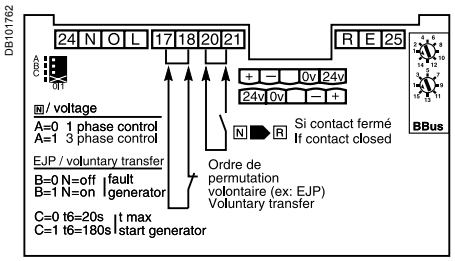

Using communication functions

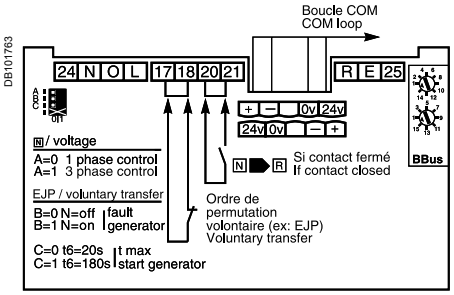

Tests on "Normal" source voltage
A = 0 single-phase test,
A = 1 three-phase test.

Voluntary transfert (e.g. for energy management)
- action in the event of genset failure

B = 0 circuit breaker N opens,
B = 1 circuit breaker N remains closed.
- maximum permissible genset startup time (T6)

C = 0 T = 120 s,
C = 1 T = 180 s.
After this time has elapsed, the genset is considered to have failed.

The address of the UA 150 controller is set using the two BBus dials.

Source-changeover systems with automatic controllers

2 Masterpact NT or NW devices

Diagram no. 51156903

Electrical interlocking with lockout after a fault

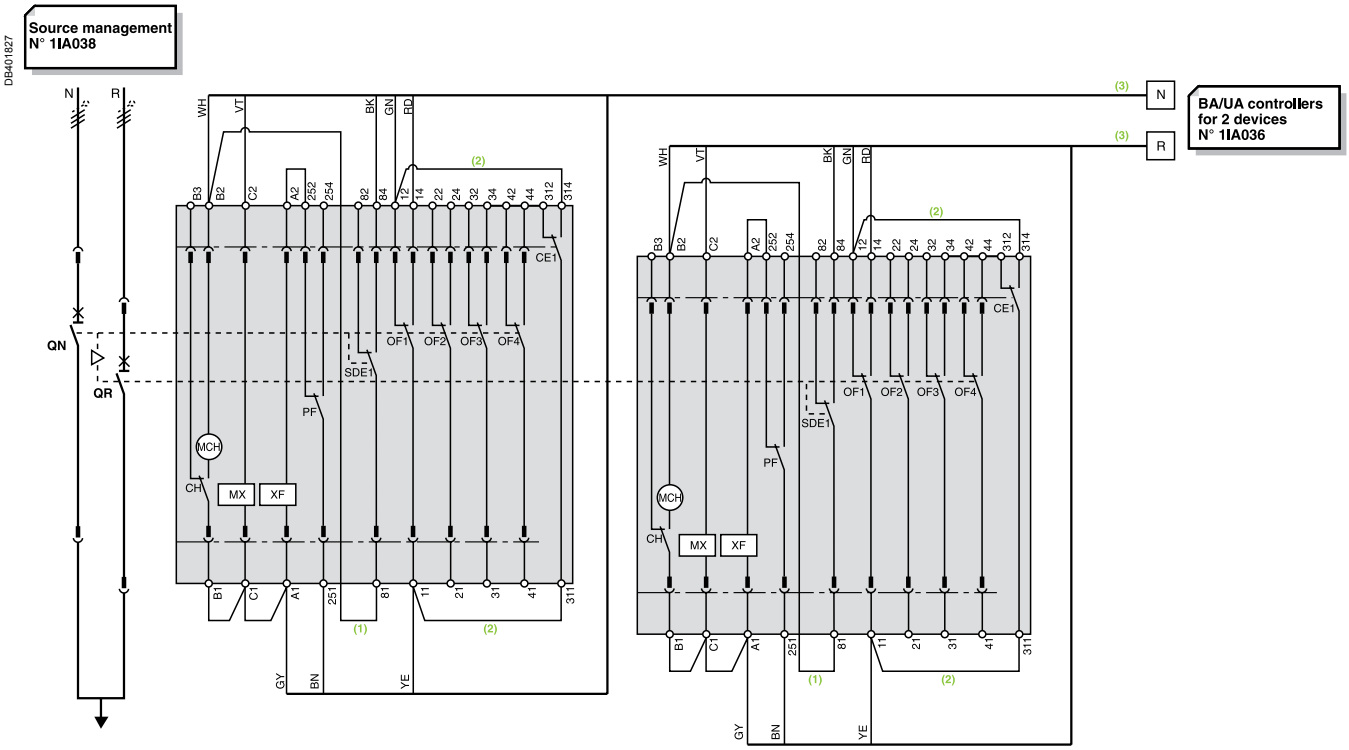

ATTENTION

The diagram shows the electrical wiring for circuit breakers. When wiring the SDE with **switch-disconnectors, connect wire BK to terminal 82.**

(1) Not to be wired for the "without lockout after a fault" solution.
(2) Not to be wired on fixed version.
(3) Prefabricated wiring supplied.

Legends

QN	*"Normal" source Masterpact NT or NW*
QR	*"Replacement" source Masterpact NT or NW*
MCH	*spring-charging motor*
MX	*standard opening voltage release*
XF	*standard closing voltage release*
OF...	*breaker ON/OFF indication contact*
SDE1	*"fault-trip" indication contact*
PF	*"ready-to-close" contact*
CE1	*"connected-position" indication contact (carriage switch)*
CH	*"springs charged" indication contact*
IVE	*electrical interlocking and terminal block unit*

Wiring colour codes

RD	GN	BK	VT	YE	GY	WH	BN
red	green	black	violet	yellow	grey	white	brown

States permitted by mechanical interlocking system

Normal	Replacement
0	0
1	0
0	1

Note:
diagram shown with circuit breakers in connected position, open, charged, and ready to close.

Additional characteristics

Presentation *3*
Functions and characteristics *A-1*
Installation recommendations *B-1*
Dimensions and connection *C-1*
Electrical diagrams *D-1*

Tripping curves E-2

Limitation curves
Current limiting E-4
Energy limiting E-5

Catalogue numbers and order form *F-1*

Tripping curves

Micrologic 2.0

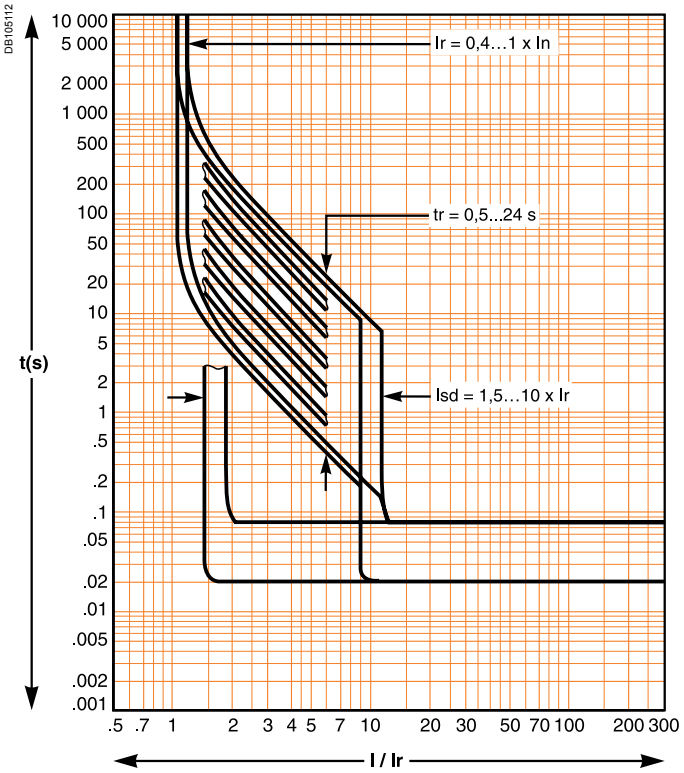

Micrologic 5.0, 6.0, 7.0

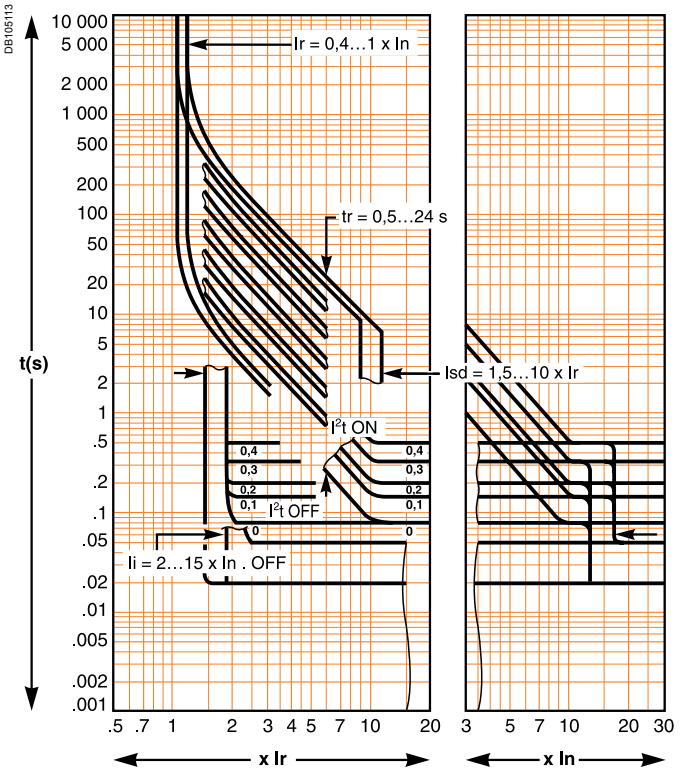

Earth fault protection (Micrologic 6.0)

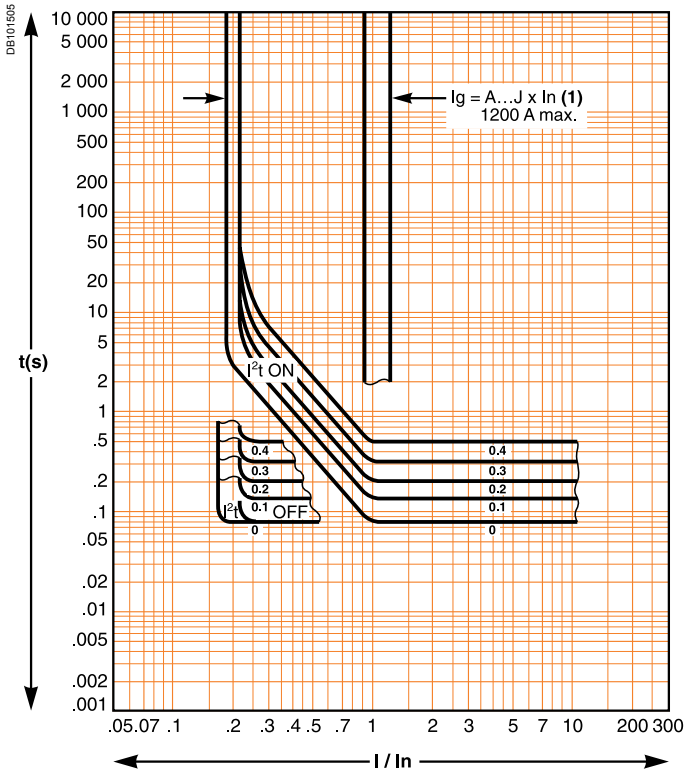

(1)

Ig = In x...	A	B	C	D	E	F	G	H	I
Ig < 400 A	0.3	0.3	0.4	0.5	0.6	0.7	0.8	0.9	1
400 A ⩽ Ig ⩽ 1200 A	0.2	0.3	0.4	0.5	0.6	0.7	0.8	0.9	1
Ig > 1200 A	500	640	720	800	880	960	1040	1120	1200

IDMTL curve (Micrologic P and H)

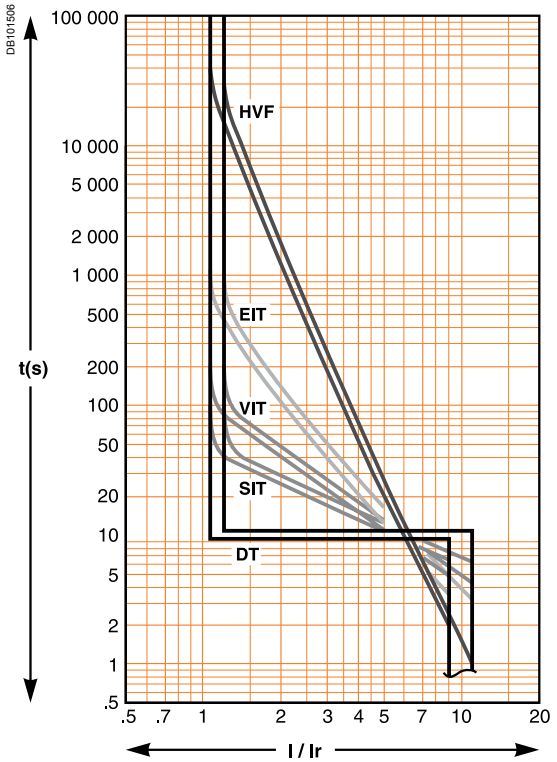

Limitation curves
Current limiting

Voltage 380/415/440 V AC

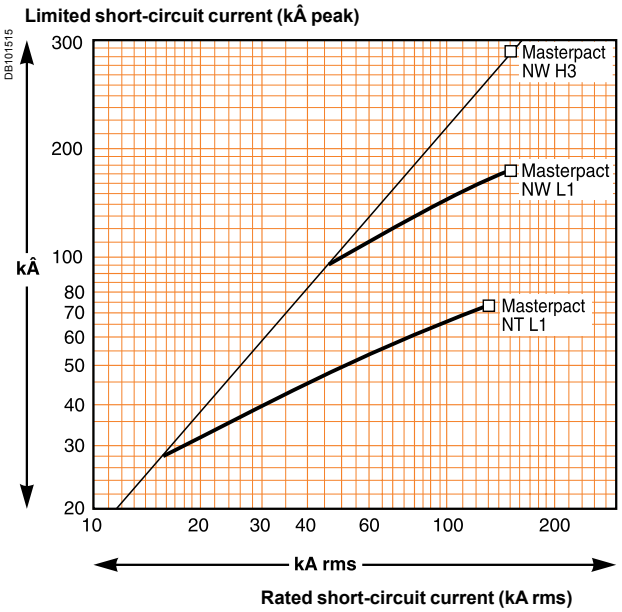

Voltage 660/690 V AC

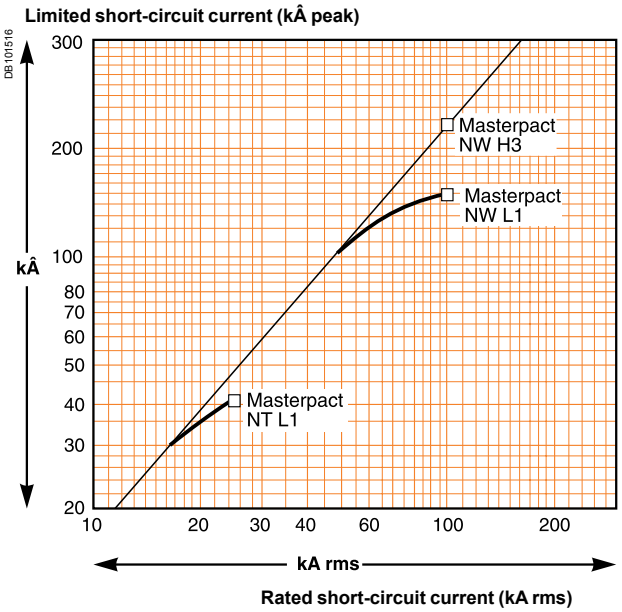

Voltage 380/415/440 V AC

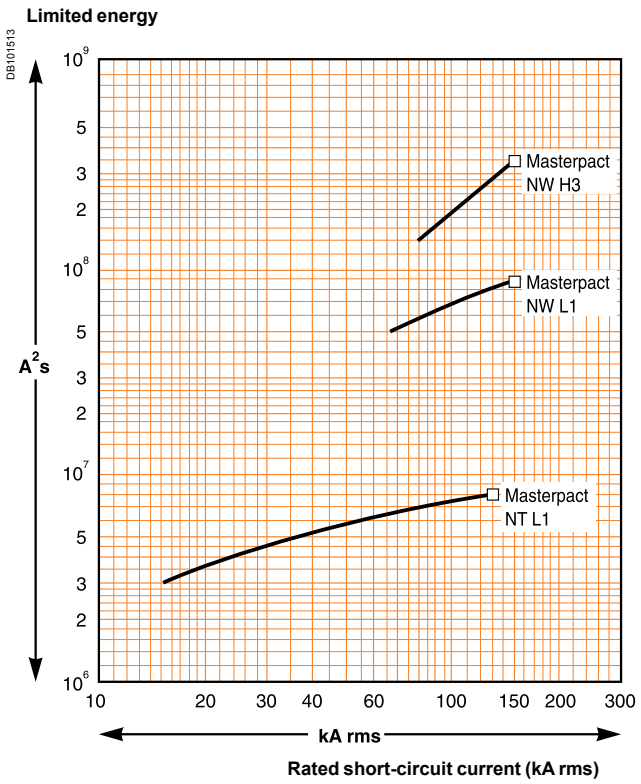

Voltage 660/690 V AC

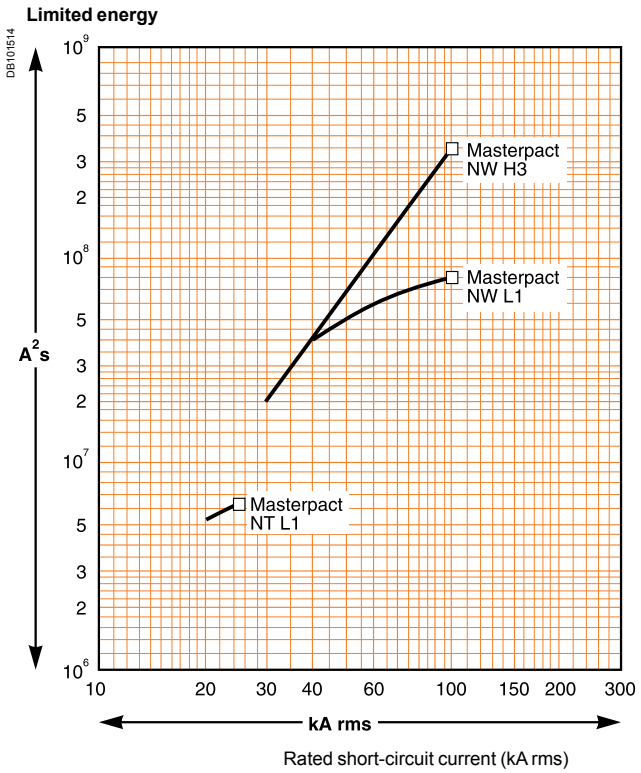

UK contact details -

0870 608 8 608

Fax 0870 608 8 606

Ireland contact details -

01 601 2200

Fax 01 601 2201

As a global specialist in energy management with operations in more than 100 countries, Schneider Electric offers integrated solutions across multiple market segments, including leadership positions in energy and infrastructure, industrial processes, building automation, and data centres/networks, as well as a broad presence in residential applications.

Focused on making energy safe, reliable, and efficient, the company's 110,000 plus employees achieved sales of 19.6 billion euros in 2010, through an active commitment to help individuals and organisations "Make the most of their energy."

We are changing our brand names and becoming one Schneider Electric. You'll get the same great quality products, but from one name you can remember and trust. This provides you and your customers with the reassurance associated with Schneider Electric.

Some of our market leading brands have already become Schneider Electric including **Merlin Gerin, Telemecanique, Square D, GET, Mita, Sarel, Himel, Thorsman, Tower** and **TAC**.

Working as one Schneider Electric makes it clearer that our ranges are highly compatible for integrated solutions.

Schneider Electric Ltd

United Kingdom
Stafford Park 5,
Telford
Shropshire
TF3 3BL
Tel: 0870 608 8 608
Fax: 0870 608 8 606
www.schneider-electric.co.uk

Ireland
Head office, Block a
Maynooth Business
Campus
Maynooth, Co. Kildare
Tel: (01) 601 2200
Fax: (01) 601 2201
www.schneider-electric.ie

Schneider Electric Limited is a company registered in England and Wales.
Registered number: 1407228. Registered office: Stafford Park 5, Telford, Shropshire TF3 3BL.

© 2011 Schneider Electric. All Rights Reserved. Schneider Electric, Active Energy Management, Compact, EcoStruxure, ION Enterprise, iRIO, Make the most of your energy, Masterpact, Micrologic, Power Plant To Plug, Modbus, and PowerLogic are owned by Schneider Electric Industries SAS, or its affiliated companies in the United States and other countries. 998-3432.

As standards, specifications and designs change from time to time, please ask for confirmation of the information given in this publication.

SE7271 AUG 2011

member of

voltimum

Schneider Electric